USE PATRIOT OIL ONLY

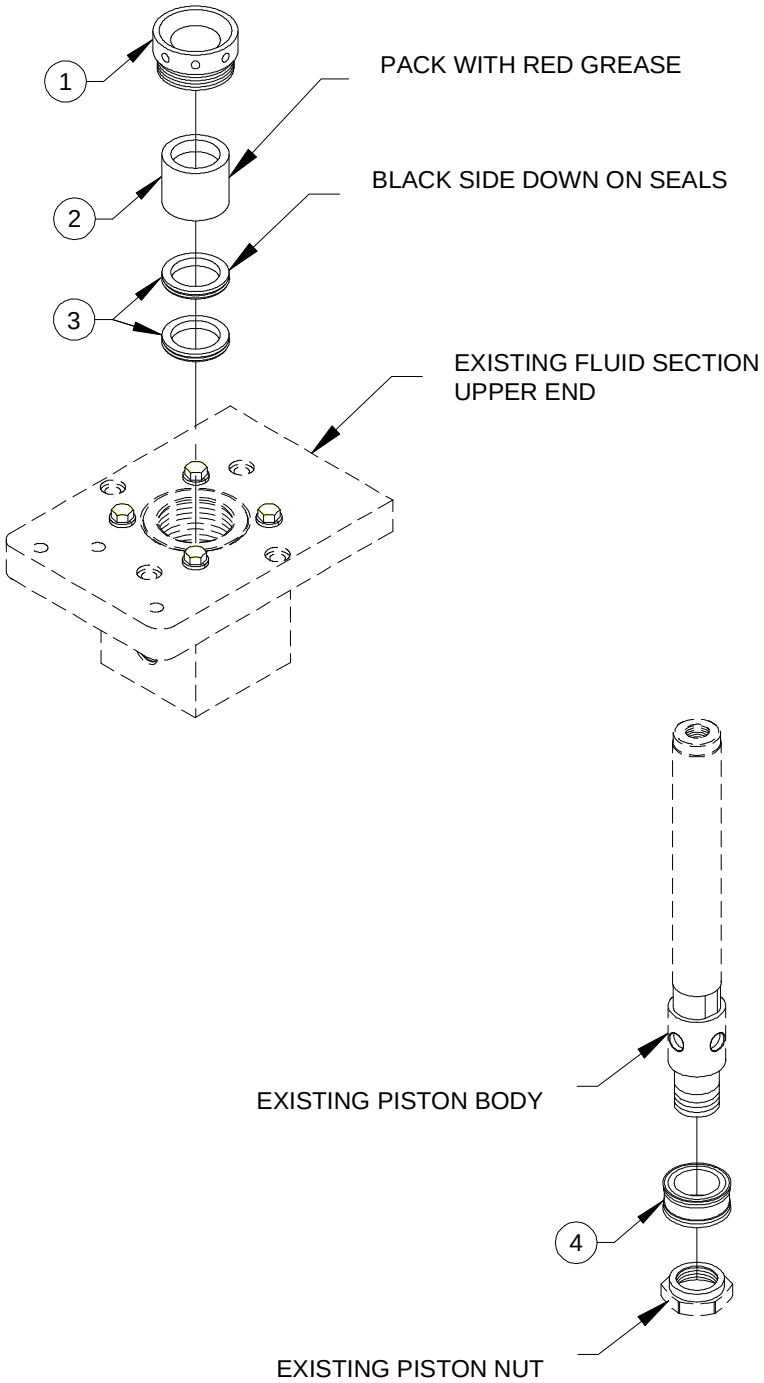

MAGNUM VENUS PRODUCTS

MAGNAPAK SEAL CONVERSION KIT	VLS-4640-CK

REV. - 11/23/05 BT2
REV. A - ITEM 3 WAS QTY. OF 1 11/23/05 BT2
REV. B - ADDED PAT-LS-OIL AND PATRIOT OIL NOTE

SEAL CONVERSION KIT VLS-4640-CK

PARTS LIST

ITEM	PART NO.	QTY	DESCRIPTION
1	VLS-4631	1	RETAINING NUT
2	VLS-4632	1	BUSHING
3	VLS-4640	2	CUP SEAL
4	VLS-4633	1	PISTON SEAL

INCLUDED IN CONVERSION KIT

PART NO.	QTY	DESCRIPTION
PAT-LS-OIL	1	LOWER SECTION OIL