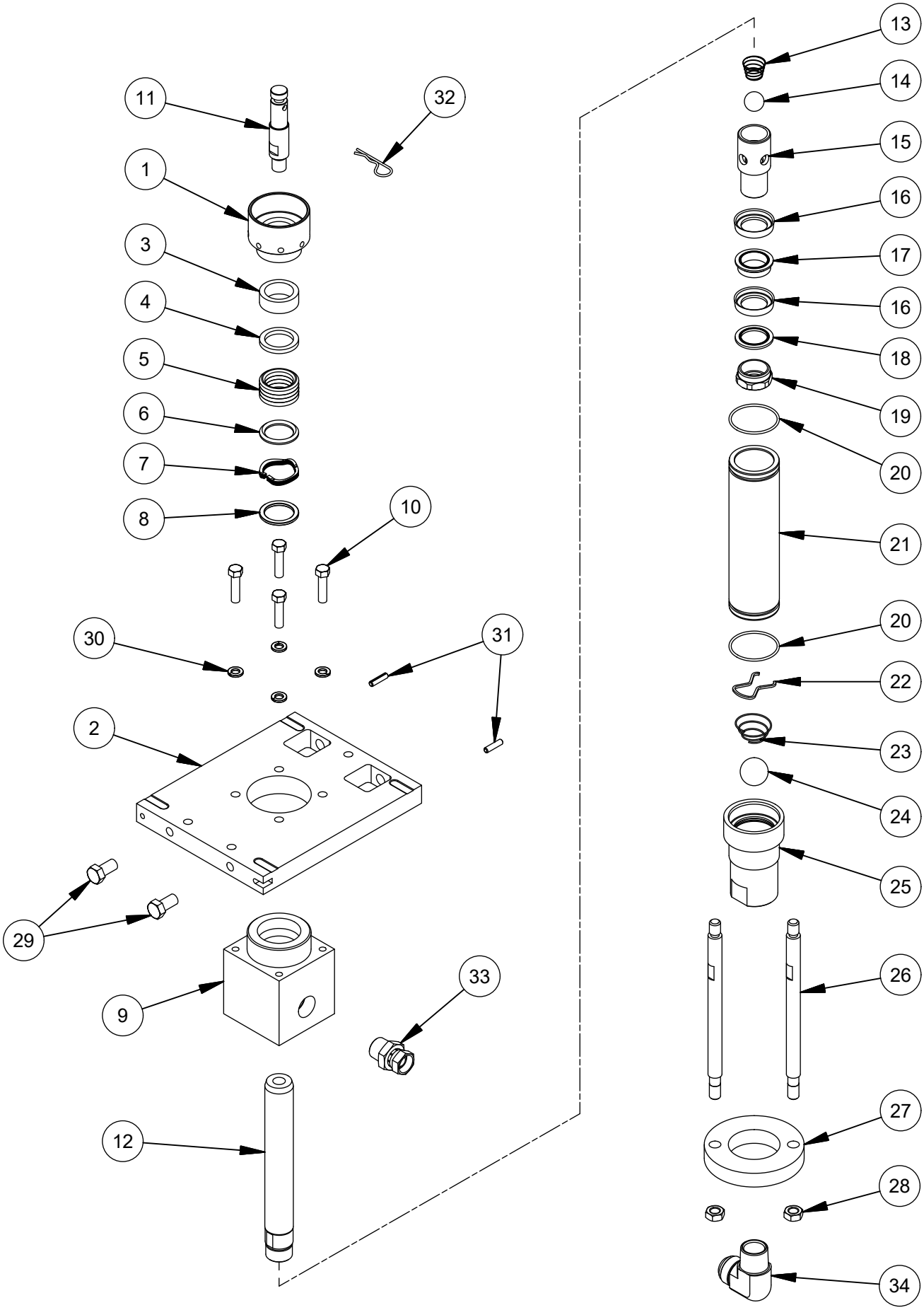

MAGNUM VENUS PLASTECH

FLUID SECTION - MULTI-COLOR GELCOAT	MCPA-4600

REV:C 01/30/2019

5/18/2017

	Parts List			
	ITEM	PART NUMBER	QTY	DESCRIPTION
	1	VLS-4607	1	SOLVENT CUP PACKING NUT
	2	3108-1-1	1	PUMP MOUNTING PLATE
	3	VLS-4603	1	GUIDE BEARING
	4	VLS-4604	1	FEMALE COMPRESSION RING
*	5	VLS-4605	1	PACKING SET- PISTON ROD
	6	VLS-4606	1	MALE COMPRESSION RING
	7	VLS-4610	10	WAVE SPRING
	8	VLS-4611	1	SPRING SUPPORT
	9	VLS-4601	1	OUTLET BODY
	10	F-HB-06C-24-GR8	4	HEX BOLT
	11	MCPA-2501	1	PUMP SHAFT ADAPTER
	12	VLS-4609	1	PISTON ROD
	13	VLS-4614	1	SPRING, PISTON BALL
*	14	ALS-1018	1	7/8" BALL
	15	VLS-4619	1	PISTON BODY
*	16	VLS-4615	2	PISTON CUP
	17	VLS-4616	1	PISTON CUP SPACER
	18	VLS-4617	1	PISTON CUP SPACER RING
	19	VLS-4618	1	PISTON NUT
*	20	O-V-137-90	2	O-RING
	21	VLS-4608	1	CYLINDER
	22	VLS-4620	1	BALL STOP
	23	VLS-4621	1	FOOT VALVE SPRING
*	24	VLS-4622	1	Ø1-1/4 CHROME BALL
	25	VLS-4602	1	FOOT VALVE BODY
	26	VLS-4623	2	CYLINDER TIE ROD
	27	VLS-4624	1	FOOT VALVE COLLAR
	28	F-HN-08C	2	HEX NUT
	29	F-HB-08C-16	2	HEX BOLT
	30	F-SW-06	4	LOCK WASHER
	31	F-RP-04-16	2	ROLL PIN
	32	09528	1	HITCH PIN
	33	PF-SW-12M-08F	1	PIPE SWIVEL
	34	PF-ME-16J-16	1	MALE ELBOW

REPAIR KITS

PART No.	DESCRIPTION
* VLS-46RK-4T-2T	REPAIR KIT

* NOTE: ASTERISKS DENOTE PARTS USED IN SEAL KIT.

OPTIONAL PARTS AND ASSEMBLIES

	PART No.	DESCRIPTION
	*6706-2-1	PUMP GREASE
17A	3101-13-2	HARDENED SPACER
18A	3101-14-2	HARDENED BACKUP RING
21A	3101-24-1	HARDENED CYLINDER

MAGNUM VENUS PLASTECH

FLUID SECTION - MULTI-COLOR GELCOAT MCPA-4600