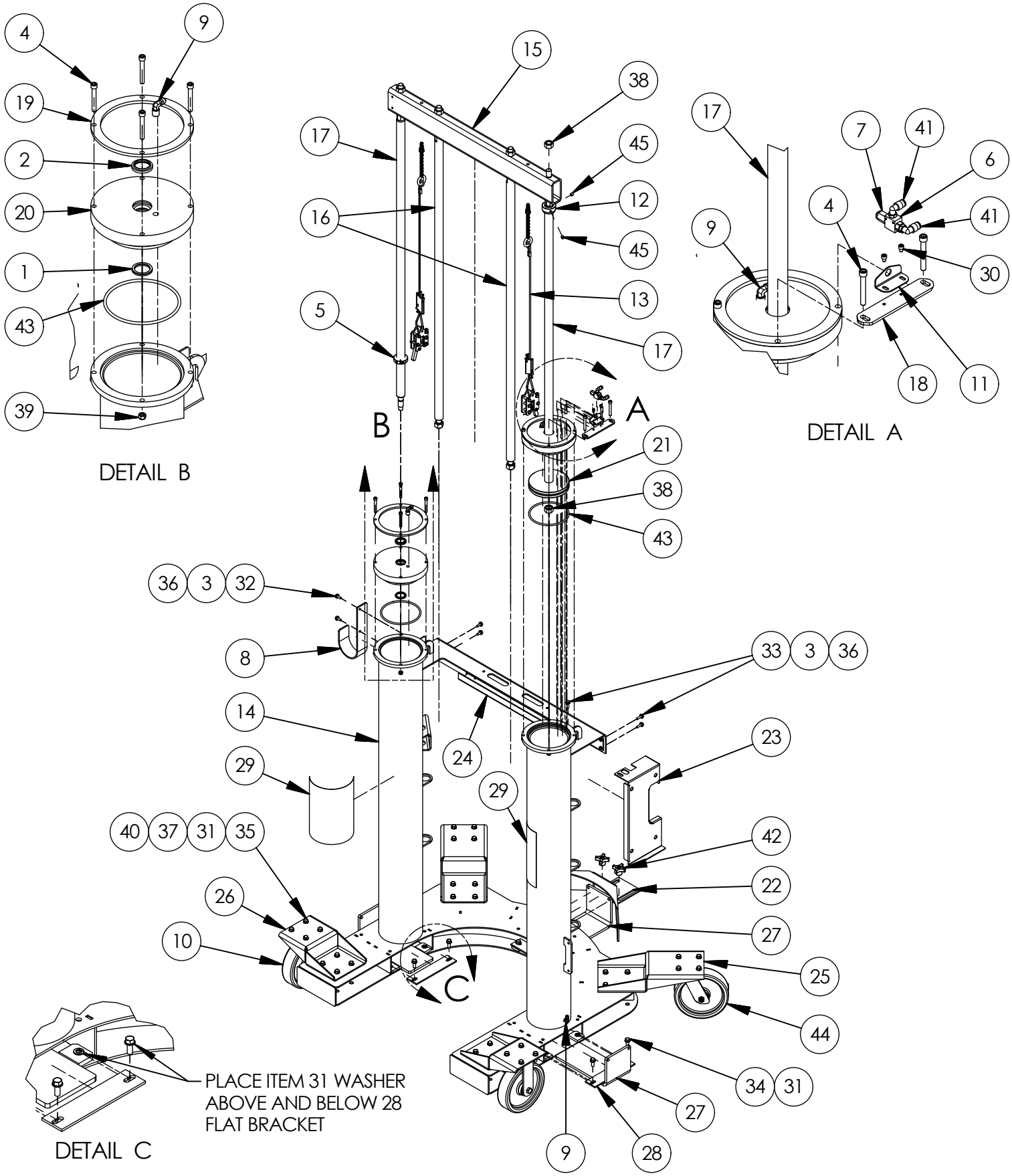

MAGNUM VENUS PRODUCTS

HIGH FORCE RAM ASSEMBLY	APD-RA-5000

REV: B 09/12/2019 SHEET 1 / 4 10/28/2016

Parts List			
ITEM	PART NUMBER	QTY	DESCRIPTION
1	02005	2	SEAL - PUTTY AIR LIFT
2	02007	2	ROD WIPER
3	02576	7	SPACER
4	02668-18	8	HEX SOCKET CAP SCREW
5	06271	2	COLLAR CLAMP
6	09321	1	3-WAY VALVE, NORMALLY OPEN
7	09343	1	BALL CAM ACTUATOR
8	60534-1	1	SUPPORT HOOK
9	7701-6-2	4	POLY ELBOW FITTING
10	9207-3-1	2	RIDGID CASTER
11	APD-1020	1	SWITCH BRACKET
12	APD-1021	1	SWITCH ACTIVATOR
13	APD-DLH-1000	2	DRUM LIFT HOOK ASSEMBLY
14	APD-RA-5001	1	WELDMENT - MAIN FRAME
15	APD-RA-5002	1	SUPPORT BAR
16	APD-RA-5003	2	LONG SUPPORT ROD
17	APD-RA-5004	2	CYLINDER ROD
18	APD-RA-5009	1	RAM LIMIT VALVE BRACKET
19	APD-RA-5041	2	SUPPORT RING
20	APD-RA-5042	2	CYLINDER CAP
21	APD-RA-5043	2	PISTON - LIFT CYLINDER
22	APD-RA-5044	1	DRUM CENTERING BRACKET
23	APD-RA-5045	1	CONTROL PANEL BRACKET
24	APD-RA-5046	1	SUPPORT PANEL
25	APD-RA-5047	2	REAR SWIVEL WHEEL BRACKET
26	APD-RA-5048	2	FRONT FIXED WHEEL BRACKET
27	APD-RA-5049	3	DRUM PEDESTAL
28	APD-RA-5050	6	FLAT BRACKET
29	APD-RA-5051	2	CYLINDER PROTECTION SHEET
30	F-CS-1024-04	2	HEX SOCKET CAP SCREW
31	F-FW-06	56	FLAT WASHER
32	F-HB-04C-12	4	HEX BOLT
33	F-HB-04C-16	3	1/4 HEX BOLT
34	F-HB-06C-16	12	HEX BOLT
35	F-HB-06C-20	32	HEX BOLT
36	F-HN-04C	7	HEX NUT
37	F-HN-06C	32	HEX NUT
38	F-HN-12F	8	HEX NUT
39	F-LN-05C	8	LOCK NUT
40	F-SW-06	32	LOCK WASHER
41	MPH-2539	2	MALE ELBOW
42	MVP-1030	2	FOUR-ARM KNOB
43	O-B-358	4	O-RING
44	VDC-1006-APD	2	SWIVEL CASTER
45	F-SS-06C-06-SS	2	SS SET SCREW

MAGNUM VENUS PRODUCTS

HIGH FORCE RAM ASSEMBLY APD-RA-5000