IVX3 Injection Valve

Component Manual

This manual is applicable to the following models:

- 8010
- 8010-INV2

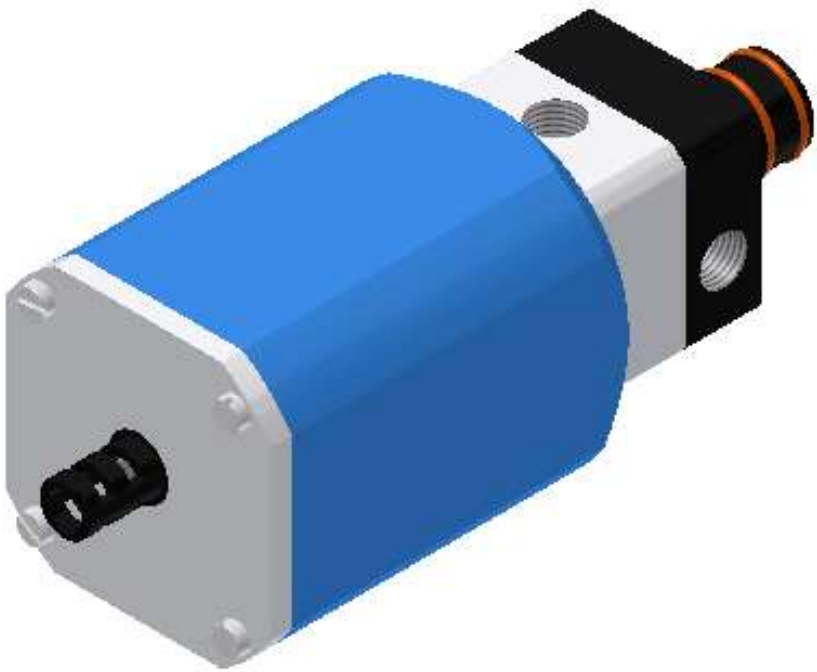

MAGNUM VENUS PRODUCTS

Rev. March 2019

CORPORATE HEADQUARTERS
2030 Falling Waters Rd, Suite 350, Knoxville, TN 37922 · USA · Tel: (865) 686-5670

DISTRIBUTION AND PURCHASING
642 Barbrow Ln, Knoxville, TN 37932 · USA · Tel: (865) 684-4416

TECHNOLOGY CENTER AND MANUFACTURING
1862 Ives Ave, Kent, WA 98032 · USA · Tel (253) 854-2660 · Fax (253) 854-1666

E-mail: info@mvpind.com

For a list of international distributors, visit our website at :

www.mvpind.com/mvp-international

Table of Contents

Safety & Warning Information

Warnings

Due to the vast number of chemicals that could be used and their varying chemical reactions, the buyer and user of this equipment should determine all factors relating to the fluids used, including any of the potential hazards involved. Particular inquiry and investigation should be made into potential dangers relating to toxic fumes, fires, explosions, reaction times, and exposure of human beings to the individual components or their resultant mixtures. MVP assumes no responsibility for loss, damage, expense or claims for bodily injury or property damage, direct or consequential, arising from the use of such chemical components.

The end user is responsible for ensuring that the end product or system complies with all the relevant laws in the country where it is to be used and that all documentation is adhered to.

Recommended Occupational Safety & Health Act (OSHA) Documentation:

- 1910.94 Pertaining to ventilation
- 1910.106 Pertaining to flammable liquids
- 1910.107 Pertaining to spray finishing operations, particularly paragraph (m), Organic Peroxides and Dual Component Coatings

For Additional information, contact the Occupational Safety and Health Administration (OSHA) at https://www.osha.gov/about.html.

Recommended National Fire Protection Association (NFPA) Documentation:

- NFPA No.33 Chapter 14 Organic Peroxides and Dual Component Materials
- NFPA No. 63 Dust Explosion Prevention
- NFPA No. 70 National Electrical Code
- NFPA No. 77 Static Electricity
- NFPA No. 91 Blower and Exhaust System
- NFPA No. 654 Plastics Industry Dust Hazards

Fire Extinguisher – code ABC, rating number 4a60bc using Extinguishing Media –Foam, Carbon Dioxide, Dry Chemical, Water Fog, is recommended for this product and applications.

The following general warnings and guidelines are for the setup, use, grounding, maintenance, and repair of equipment. Additional product-specific warnings may be found throughout this manual as applicable. Please contact your nearest MVP Technical Service Representative if additional information is needed.

Safety Precautions
• Avoid skin contact and inhalation of all chemicals.
• Review Material Safety Data Sheet (MSDS) to promote the safe handling of chemicals in use.
• Restrict the use of all chemicals to designated areas with good ventilation.
• Chemicals are flammable and reactive.
• Noxious fumes released when combusted.
• Operate equipment in a ventilated environment only.
• Uncured liquid resins are highly flammable unless specifically labeled otherwise.
• Cured laminate, accumulations of overspray, and laminate sandings are highly combustible.
• Do not operate or move electrical equipment when flammable fumes are present.
• Ground all equipment.
• If a spark is seen or felt, immediately halt operation. Do not operate the equipment until the issue has been identified and repaired.
• Contaminated catalyst may cause fire or explosion.
• Containers may explode if exposed to fire / heat.
• Use and store chemicals away from heat, flames, and sparks.
• Do not smoke in work areas or near stored chemicals.
• Do not mix Methyl Ethyl Ketone Peroxide (MEKP) with materials other than polyethylene.
• Do not dilute MEKP.
• Keep food and drink away from work area.


Physical Hazards
• Never look directly into the spray gun fluid tip. Serious injury or death can result.
• Never aim the spray gun at or near another person. Serious injury or death can result.
• Chemical compounds can be severely irritating to the eyes and skin.
• Inhalation, ingestion, or injection may damage internal organs and lead to pulmonary disorders, cancers, lymphomas, and other diseases or health conditions.
• Other potential health effects include: irritation of the eyes and upper respiratory tract, headache, light-headedness, dizziness, confusion, drowsiness, nausea, vomiting, and occasionally abdominal pain.
• Eye contact: Immediately flush with water for at least 15 minutes and seek immediate medical attention.
• Skin Contact: Immediately wash with soap and water and seek immediate medical attention.
• Inhalation: Move the person to fresh air and seek immediate medical attention.
• Do not remove shields, covers, or safety features on equipment that is in use.
• Never place fingers, hands, or any body part near or directly in front of the spray gun fluid tip. The force of the liquid as it exits the spray tip can shoot liquid through the skin.
• Keep hands and body parts away from any moving equipment or components.
• Do not stand under plunger
• An improperly loaded drum may lead to an imbalance, causing a unit to tip over
 

Personal Protective Equipment (PPE)
• MVP recommends the use of personal safety equipment with all products in our catalog.
• Wear safety goggles, hearing protection, a respirator, and chemical resistant gloves.
• Wear long sleeve shirts or jackets and pants to minimize skin exposure.
• PPE should be worn by operators and service technicians to reduce the risk of injury.


For Additional information, contact the Occupational Safety and Health Administration (OSHA). https://www.osha.gov/about.html

Symbol Definitions

Indicates the risk of contact with chemicals that are hazardous, which may lead to injury or death.

Indicates the risk of contact with voltage / amperage that may lead to serious injury or death

Indicates that the materials being used are susceptible to combustion

Indicates the risk of contact with moving components that may lead to serious injury or death.

Indicates that the system or component should be grounded before proceeding with use or repair.

Indicates the use of lit cigarettes or cigars is prohibited, because the materials being used are susceptible to combustion.

Indicates that the materials and/or the process being performed can lead to ignition and explosion.

A recommendation for the use of Personal Protective Equipment (PPE) before using or repairing the product.

Polymer Matrix Materials: Advanced Composites

Potential health hazards associated with the use of advanced composites can be controlled through the implementation of an effective industrial hygiene and safety program.

https://www.osha.gov/dts/osta/otm/otm_iii/otm_iii_1.html#t iii:1_1

Resins		
Composite Component	**Organ System Target (Possible Target)**	**Known (Possible) Health Effect**
Epoxy resins	Skin, lungs, eyes	Contact and allergic dermatitis, conjunctivitis
Polyurethane resins	Lungs, skin, eyes	Respiratory sensitization, contact dermatitis, conjunctivitis
Phenol formaldehyde	Skin, lungs, eyes	As above (potential carcinogen)
Bismaleimides (BMI)	Skin, lungs, eyes	As above (potential carcinogen)
Polyamides	Skin, lungs, eyes	As above (potential carcinogen)
Reinforcing materials		
Composite Component	**Organ System Target (Possible Target)**	**Known (Possible) Health Effect**
Aramid fibers	Skin (lungs)	Skin and respiratory irritation, contact dermatitis (chronic interstitial lung disease)
Carbon/graphite fibers	Skin (lungs)	As noted for aramid fibers
Glass fibers (continuous filament)	Skin (lungs)	As noted for aramid fibers
Hardeners and curing agents		
Composite Component	**Organ System Target (Possible Target)**	**Known (Possible) Health Effect**
Diaminodiphenylsulfone	N/A	No known effects with workplace exposure
Methylenedianiline	Liver, skin	Hepatotoxicity, suspect human carcinogen
Other aromatic amines		
Composite Component	**Organ System Target (Possible Target)**	**Known (Possible) Health Effect**
Meta-phenylenediamine (MPDA)	Liver, skin (kidney, bladder)	Hepatitis, contact dermatitis (kidney and bladder cancer)
Aliphatic andcyclo-aliphatic amines	Eyes, skin	Severe irritation, contact dermatitis
Polyaminoamide	Eyes, skin	Irritation (sensitization)
Anhydride	Eyes, lungs, skin	Severe eye and skin irritation, respiratory sensitization, contact dermatitis

Catalyst - Methyl Ethyl Ketone Peroxide (MEKP)

MEKP is among the more hazardous materials found in commercial channels. The safe handling of the "unstable (reactive)" chemicals presents a definite challenge to the plastics industry. The highly reactive property which makes MEKP valuable to the plastics industry in producing the curing reaction of polyester resins also produces the hazards which require great care and caution in its storage, transportation, handling, processing and disposal. MEKP is a single chemical. Various polymeric forms may exist which are more or less hazardous with respect to each other. These differences may arise not only from different molecular structures (all are, nevertheless, called "MEKP") and from possible trace impurities left from the manufacture of the chemicals, but may also arise by contamination of MEKP with other materials in its storage or use. Even a small amount of contamination with acetone, for instance, may produce an extremely shock-sensitive and explosive compound.

WARNING

Contamination with promoters, materials containing promoters (such as laminate sandings), or with any readily oxidizing material (such as brass or iron) will cause exothermic redox reactions which can be explosive in nature. Heat applied to MEKP or heat buildup from contamination reactions can cause the material to reach its Self-Accelerating Decomposition Temperature (SADT).

Researchers have reported measuring pressure rates-of-rise well over 100,000 psi per second when certain MEKP's reach their SADT. For comparison, the highest-pressure rate-of-rise listed in NFPA Bulletin NO.68, "Explosion Venting", is 12,000 psi per second for an explosion of 12% acetylene and air. The maximum value listed for a hydrogen explosion is 10,000 psi per second. Some forms of MEKP, if allowed to reach their SADT, will burst even an open topped container. This suggests that it is not possible to design a relief valve to vent this order of magnitude of pressure rate-of-rise. The user should be aware that any closed container, be it a pressure vessel, surge chamber, or pressure accumulator, could explode under certain conditions. There is no engineering substitute for care by the user in handling organic peroxide catalysts. If, at any time, the pressure relieve valve on top of the catalyst tank should vent, the area should be evacuated at once and the fire department called. The venting could be the first indication of a heat, and therefore, pressure build-up that could eventually lead to an explosion. Moreover, if a catalyst tank is sufficiently full when the pressure relief valve vents, some catalyst may spray out, which could cause eye injury. For this reason, and many others, anyone whose job puts them in an area where this vented spray might go, should always wear full eye protection even when laminating operations are not taking place.

Safety in handling MEKP depends to a great extent on employee education, proper safety instructions, and safe use of the chemicals and equipment. Workers should be thoroughly informed of the hazards that may result from improper handling of MEKP, especially regarding contamination, heat, friction and impact. They should be thoroughly instructed regarding the proper action to be taken in the storage, use, and disposal of MEKP and other hazardous materials used in the laminating operation. In addition, users should make every effort to:

- Store MEKP in a cool, dry place in original containers away from direct sunlight and away from other chemicals.
- Keep MEKP away from heat, sparks, and open flames.
- Prevent contamination or MEKP with other materials, including polyester over spray and sandings, polymerization accelerators and promoters, brass, aluminum, and non-stainless steels.

- Never add MEKP to anything that is hot, since explosive decomposition may result.
- Avoid contact with skin, eyes, and clothing. Protective equipment should be worn at all times. During clean-up of spilled MEKP, personal safety equipment, gloves, and eye protection must be worn. Firefighting equipment should be at hand and ready.
- Avoid spillage, which can heat up to the point of self-ignition.
- Repair any leaks discovered in the catalyst system immediately, and clean-up the leaked catalyst at once in accordance with the catalyst manufacturer's instructions.
- Use only original equipment or equivalent parts from Magnum Venus Products in the catalyst system (i.e.: hoses, fitting, etc.) because a dangerous chemical reaction may result between substituted parts and MEKP.
- Catalyst accumulated from the purging of hoses or the measurement of fluid output deliveries should never be returned to the supply tank, such catalyst should be diluted with copious quantities of clean water and disposed of in accordance with the catalyst manufacturer's instructions.

The extent to which the user is successful in accomplishing these ends and any additional recommendations by the catalyst manufacturer determines largely the safety that will be present in his operation.

Clean-Up Solvents and Resin Diluents

WARNING

A hazardous situation may be present in your pressurized fluid system! Hydro carbon solvents can cause an explosion when used with aluminum or galvanized components in a closed (pressurized) fluid system (pump, heaters, filters, valves, spray guns, tanks, etc.). An explosion could cause serious injury, death, and/or substantial property damage. Cleaning agents, coatings, paints, etc. may contain Halogenated Hyrdrocarbon solvents. Some Magnum Venus Products spray equipment includes aluminum or galvanized components and will be affected by Halogenated Hydrocarbon solvents.

There are three key elements to the Halogenated Hyrdocarbon (HHC) solvent hazard.

1.	The presence of HHC solvents.	1,1,1 – Trichloroethane and Methylene Chloride are the most common of these solvents. However, other HHC solvents are suspect if used; either as part of paint or adhesives formulation, or for clean-up flushing.
2.	Aluminum or Galvanized Parts.	Most handling equipment contains these elements. In contact with these metals, HHC solvents could generate a corrosive reaction of a catalytic nature.
3.	Equipment capable of withstanding pressure.	When HHC solvent contact aluminum or galvanized parts inside a closed container such as a pump, spray gun, or fluid handling system, the chemical reaction can, over time, result in a build-up of heat and pressure, which can reach explosive proportions. When all three elements are present, the result can be an extremely violent explosion. The reaction can be sustained with very little aluminum or galvanized metal; any amount of aluminum is too much.

- The reaction is unpredictable. Prior use of an HHC solvent without incident (corrosion or explosion) does NOT mean that such use is safe. These solvents can be dangerous alone (as a clean-up or flushing agent) or when used as a component or a coating material. There is no known inhibitor that is effective under all circumstances. Mixing HHC solvents with other materials or solvents such as MEKP, alcohol, or toluene may render the inhibitors ineffective.
- The use of reclaimed solvents is particularly hazardous. Reclaimers may not add any inhibitors. The possible presence of water in reclaimed solvents could also feed the reaction.
- Anodized or other oxide coatings cannot be relied upon to prevent the explosive reaction. Such coatings can be worn, cracked, scratched, or too thin to prevent contact. There is no known way to make oxide coatings or to employ aluminum alloys to safely prevent the chemical reaction under all circumstances.
- Several solvent suppliers have recently begun promoting HHC solvents for use in coating systems. The increasing use of HHC solvents is increasing the risk. Because of their exemption from many state implementation plans as Volatile Organic Compounds (VOCs), their low flammability hazard, and their not being classified as toxic or carcinogenic substances, HHC solvents are very desirable in many respects.

WARNING

Do not use Halogenated Hydrocarbon (HHC) solvents in pressurized fluid systems having aluminum or galvanized wetted parts.
Magnum Venus Products is aware of NO stabilizers available to prevent HHC solvents from reaction under all conditions with aluminum components in closed fluid systems. HHC solvents are dangerous when used with aluminum components in a closed fluid system.

- Consult your material supplier to determine whether your solvent or coating contains Halogenated Hydrocarbon solvents.
- Magnum Venus Products recommends that you contact your solvent supplier regarding the best non-flammable clean-up solvent with the heat toxicity for your application.
- If, however, you find it necessary to use flammable solvents, they must be kept in approved, electrically grounded containers.
- Bulk solvent should be stored in a well-ventilated, separate building, 50 feet away from your main plant.
- You should only allow enough solvent for one day's use in your laminating area.
- NO SMOKING signs must be posted and observed in all areas of storage or where solvents and other flammable materials are used.
- Adequate ventilation (as covered in OSHA Section 1910.94 and NFPA No.91) is important wherever solvents are stored or used, to minimize, confine and exhaust the solvent vapors.
- Solvents should be handled in accordance with OSHA Section 1910.106 and 1910.107.

Catalyst Diluents

Magnum Venus Products spray-up and gel-coat systems currently produced are designed so that catalyst diluents are not required. Magnum Venus Products therefore recommends that diluents not be used to avoid possible contamination which could lead to an explosion due to the handling and mixing of MEKP and diluents. In addition, it eliminates any problems from the diluent being contaminated through rust particles in drums, poor quality control on the part of the diluents suppliers, or any other reason. If diluents are absolutely required, contact your catalyst supplier and follow his instructions explicitly. Preferably the supplier should premix the catalyst to prevent possible "on the job" contamination while mixing.

WARNING

If diluents are not used, remember that catalyst spillage and gun, hose, and packing leaks are potentially more hazardous since each drop contains a higher concentration of catalyst and will therefore react more quickly with overspray and the leak.

Cured Laminate, Overspray and Laminate Sandings Accumulation

- Remove all accumulations of overspray, Fiberglass Reinforced Plastic (FRP) sandings, etc. from the building as they occur. If this waste is allowed to build up, spillage of catalyst is more likely to start a fire; in addition, the fire would burn hotter and longer.
- Floor coverings, if used, should be non-combustible.
- Spilled or leaked catalyst may cause a fire if it comes in contact with an FRP product, over-sprayed chop or resin, FRP sandings or any other material with MEKP.

To prevent spillage and leakage, you should:

1.	Maintain your Magnum Venus Products System.	Check the gun several times daily for catalyst and resin packing or valve leaks. REPAIR ALL LEAKS IMMEDIATELY.
2.	Never leave the gun hanging over or lying inside the mold.	A catalyst leak in this situation would certainly damage the part, possibly the mold, and may cause a fire.
3.	Inspect resin and catalyst hoses daily for wear or stress at the entry and exits of the boom sections and at the hose and fittings.	Replace if wear or weakness is evident or suspected.
4.	Arrange the hoses and fiberglass roving guides so that the fiberglass strands DO NOT rub against any of the hoses at any point.	If allowed to rub, the hose will be cut through, causing a hazardous leakage of material which could increase the danger of fire. Also, the material may spew onto personnel in the area.

Toxicity of Chemicals

- Magnum Venus Products recommends that you consult OSHA Sections 1910.94, 1910.106, 1910.107 and NFPA No.33, Chapter 14, and NFPA No.91.
- Contact your chemical supplier(s) and determine the toxicity of the various chemicals used as well as the best methods to prevent injury, irritation and danger to personnel.
- Also determine the best methods of first aid treatment for each chemical used in your plant.

Equipment Safety

Magnum Venus Products suggest that personal safety equipment such as EYE GOGGLES, GLOVES, EAR PROTECTION, and RESPIRATORS be worn when servicing or operating this equipment. Ear protection should be worn when operating a fiberglass chopper to protect against hearing loss since noise levels can be as high as 116 dB (decibels). This equipment should only be operated or serviced by technically trained personnel!

CAUTION

Never place fingers, hands, or any body part near or directly in front of the spray gun fluid tip. The force of the liquid as it exits the spray tip can cause serious injury by shooting liquid through the skin. NEVER LOOK DIRECTLY INTO THE GUN SPRAY TIP OR POINT THE GUN AT OR NEAR ANOTHER PERSON OR AN ANIMAL.

DANGER

Contaminated catalyst may cause fire or explosion. Before working on the catalyst pump or catalyst accumulator, wash hands and tools thoroughly. Be sure work area is free from dirt, grease, or resin. Clean catalyst system components with clean water daily.

DANGER

Eye, skin, and respiration hazard. The catalyst MEKP may cause blindness, skin irritation, or breathing difficulty. Keep hands away from face. Keep food and drink away from work area.

Treatment of Chemical Injuries

CAUTION

Refer to your catalyst manufacturer's safety information regarding the safe handling and storage of catalyst. Wear appropriate safety equipment as recommended.

Great care should be used in handling the chemicals (resins, catalyst and solvents) used in polyester systems. Such chemicals should be treated as if they hurt your skin and eyes and as if they are poison to your body. For this reason, Magnum Venus Products recommends the use of protective clothing and eye wear in using polyester systems. However, users should be prepared in the event of such an injury.

Precautions include:

1. Know precisely what chemicals you are using and obtain information from your chemical supplier on what to do in the event the chemical gets onto your skin or into the eyes, or if swallowed.
2. Keep this information together and easily available so that it may be used by those administering first aid or treating the injured person.
3. Be sure the information from your chemical supplier includes instructions on how to treat any toxic effects the chemicals have.

WARNING

Contact your doctor immediately in the event of an injury. If the product's MSDS includes first aid instructions, administer first aid immediately after contacting a doctor.

Fast treatment of the outer skin and eyes that contact chemicals generally includes immediate and thorough washing of the exposed skin and immediate and continuous flushing of the eyes with lots of clean water for at least 15 minutes or more. These general instructions of first aid treatment may be incorrect for some chemicals; you must know the chemicals and treatment before an accident occurs. Treatment for swallowing a chemical frequently depends upon the nature of the chemical.

Emergency Stop Procedure

In an emergency, follow these steps to stop a system:

1. The ball valve located where the air enters the power head of the resin pump, should be moved to the "OFF" or closed position.

Note ***The "open" or "on" position is when the ball valve handle is parallel (in line) with the ball valve body. The "closed" or "off" position is when the ball valve handle is perpendicular (across) the ball valve body.***

2. Turn all system regulators to the "OFF" position (counter-clockwise) position.
3. Verify / secure the catalyst relief line, located on the catalyst relief valve.
4. Verify / secure the resin return line, located on the resin filter.
5. Place a container under the resin pump ball valve to catch ejected resin.
6. Locate the ball valve on the resin pump.
7. Rotate the ball valve 90 degrees to the "On" or open position.

Grounding

Grounding an object means providing an adequate path for the flow of the electrical charge from the object to the ground. An adequate path is one that permits charge to flow from the object fast enough that it will not accumulate to the extent that a spark can be formed. It is not possible to define exactly what will be an adequate path under all conditions since it depends on many variables. In any event, the grounding means should have the lowest possible electrical resistance.

Grounding straps should be installed on all loose conductive objects in the spraying area. This includes material containers and equipment. Magnum Venus Products recommends grounding straps be made of AWG No.18 stranded wire as a minimum and the larger wire be used where possible. NFPA Bulletin No77 states that the electrical resistance of such a leakage path may be as low as 1 meg ohm (10 ohms) but that resistance as high as 10,000 meg ohms will produce an adequate leakage path in some cases.

CAUTION

Whenever flammable or combustible liquids are transferred from one container to another, or from one container to the equipment, both containers or container and equipment shall be effectively bonded and grounded to dissipate static electricity. For further information, see National Fire Protection Association (NFPA) 77, titled "Recommended Practice on Static Electrical". Refer especially to section 7-7 titled "Spray Application of Flammable and Combustible Materials".

Introduction

The IVX3 was designed as part of the flex molding process to streamline infusion by reducing the number of valves needed. The IVX3 is a pneumatically activated three position valve; Inject, Off, and Purge. The IVX3 is compatible with the MVP universal mold insert and suitable for use in other closed mold applications such as RTM light.

When used in conjunction with the PPVS vacuum control valve, the IVX3 can automate the infusion process whether used with a single resin channel or multiple resin configuration.

This manual provides information for the operation, maintenance, and simple repair of the MVP IVX3 Injection Valve. The following procedures are included:

- Repair instructions
- Installation instructions
- Step-by-step operation instructions

Please read this manual carefully and retain for future reference. Follow the steps in the order given, otherwise you may damage the equipment or injure yourself.

As you disassemble the equipment for repair, lay out the components in the correct order and direction to assist with reassembly. Refer to the correct component drawings prior to disassembly and before ordering parts.

Unit Overview

Below helps identify the main components and controls the operator needs to know for proper operation for the unit.

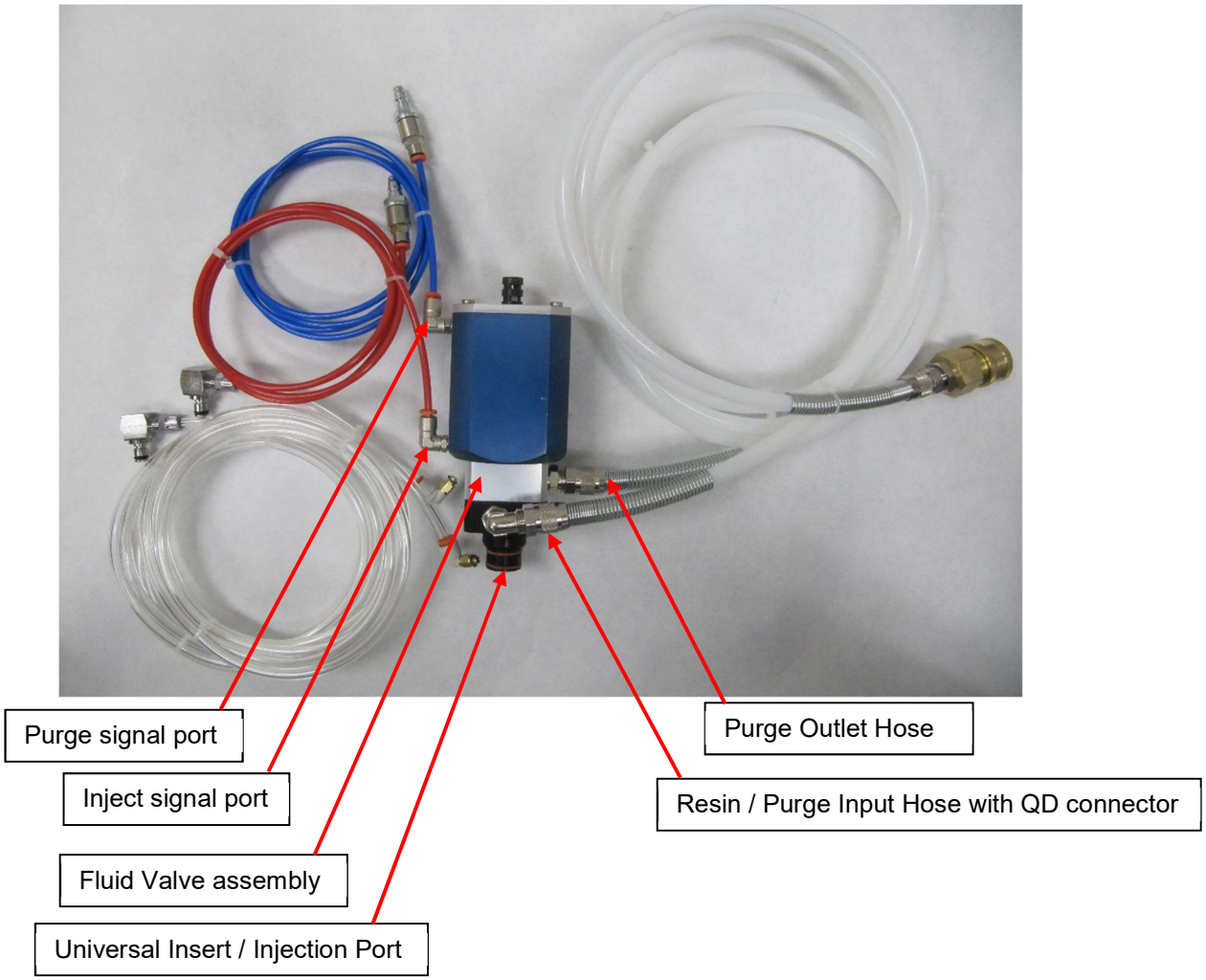

Mode Overview

Injection Valve Modes	
Mode	**Description**
OFF	This is default. Injection, purge, and input ports are blocked. The valve is closed and no fluid can move through it.
Injection	By applying an air signal to the injection signal port the valve will open, allowing material into he mold through the universal insert port.
Purge	By applying an air signal to the purge signal port the valve will allow resin or solvent through to the purge port.

Connecting Valve

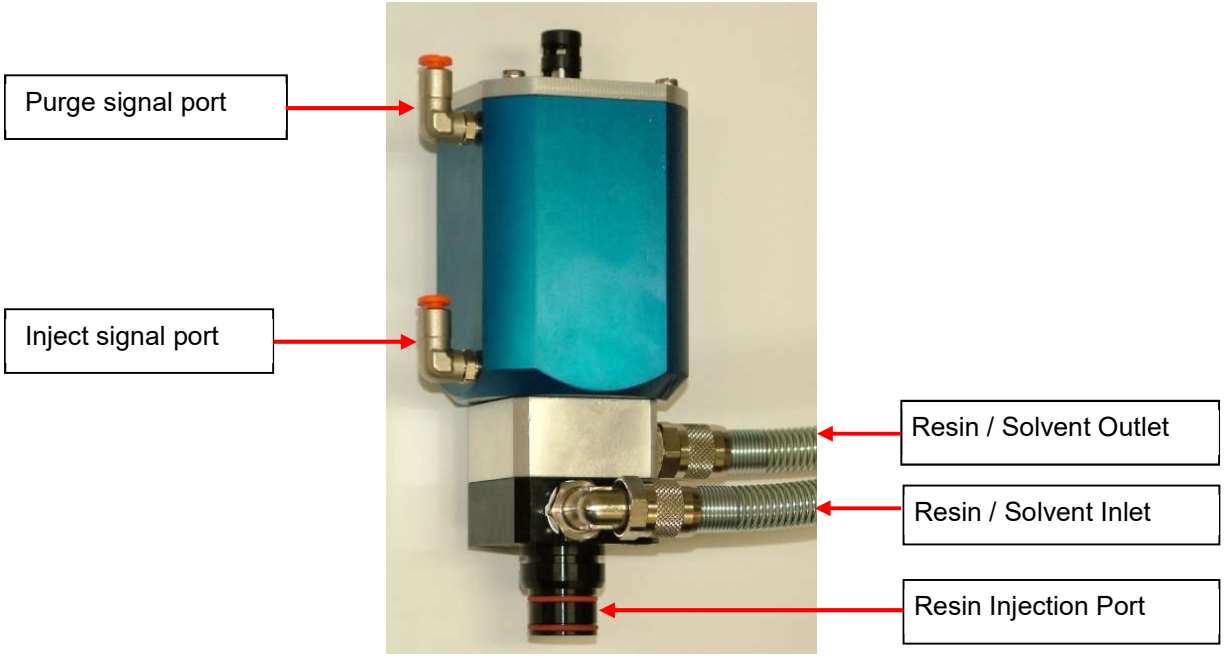

Valve Pressure Ratings

- Actuator Air Pressure: 90 psi (6 bar) to 100 psi (7 bar)
- Maximum fluid pressure (resin ports): 100 psi (7 bar)

Note ***Use clean, filtered, non-lubricated air to supply the signal port of the actuator. The IVx3 Valve contains the parts to connect to either old or new Innovator control boxes.***

Connecting to PPVS Infusion Valve (if applicable)

Connecting the IVX3 Injection valve to the PPVS Infusion will allow for automatic Open/Close control of the IVX3 valve based on the vacuum level. To connect to the PPVS Infusion valve, follow these steps:

1. Connect the **Output** signal of the PPVS to the **Inject** signal port on the IVX3 valve.
2. Connect the **Purge** signal port to a purge valve or flush signal.

Note ***The control circuit must ensure that the Inject and Purge signal ports cannot be pressurized at the same time. This could damage the mold, valve, and/or part.***

3. Connect the resin supply inlet and outlet the same way.

Note ***The PPVS Infusion valve should normally be positioned around 3 inches (80 mm) from the injection valve, but this may vary per application. Control boxes are available for this configuration. Contact MVP for more information.***

Connect the outlet signal of the PPVS-INFUSION to the Injection port of the IVX3 valve

Connect the outlet signal of the PPVS-INFUSION to the Injection port of the IVX3 valve

PPVS-INFUSION

PPVS-INFUSION

Note ***For some applications (particularly where high flow rates are required), take great care when closing a valve while an injection is in progress. The user must ensure that safe guards are in place to prevent a sudden restriction in the supply line due to a closed valve or the supply line may over-pressurize and burst.***

Connecting to Innovator II Control Box

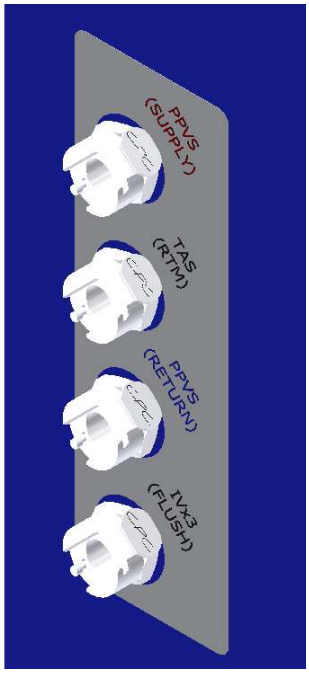

To connect the valve directly to the control box, follow these steps:

4. Connect the injection port to the **TAS** connection on the side of the control box using the supplied quick disconnect fitting and tubing.
5. Connect the **Purge** port on the IVX3 valve to the **IVX3** connection on the side of the control box using supplied quick disconnect fitting and tubing.

Note ***Once the flush cycle is initiated this line will move the IVX3 valve into the flush position. This line is active until the next injection cycle starts.***

6. If you are using for an RTM application, connect a Turbo Autosprue (TAS) or similar valve to the machine.

Note ***This line becomes active once the injection cycle is initiated.***

Operating Valve

1. Put the IVX3 valve in **Off** mode (closed).
2. Set MPG and pump pressure.

CAUTION

Do not exceed the pressure rating of the injection hose for the MPG or pump pressure. Note the ratio of the pump powerhead to fluid section when calculating.

3. Put the valve in **Purge** mode.
4. Start the machine and wait for the material to begin to flow into the supply line for the prime valve or into the flush line for the resin valve.
5. Put the valve back into **Off** mode.
6. Reset the unit's counter.
7. When you are ready to inject, put the valve in **Inject** mode.

   The PPVS will open and close the IVX3 valve automatically. When the valve is closed the machine will stop on the MPG.
8. When the mold is full, put the IVX3 in **Off** mode and stop the machine.
9. Put the IVX3 in **Purge** mode and then flush.
10. Leave the valve in **Purge** mode (with air on the actuator) until the material gels to prevent resin curing in the valve.

Note ***If the valve seal sticks in the Purge position after an injection, supply air to the inject position air line to drive the actuator upward. Operate the valve between purge and inject a number of times and ensure the inside of the nose is clean and the valve moves freely.***

Note ***Apply a release agent to the internal bore of the valve inside the nose when the valve is actuated in the inject position (shaft upmost) to prevent the seal sticking up.***

Repairing Fluid Valve

Note ***It is important to have the correct parts drawing for the item you are working on to assist in identifying the correct part numbers for the assembly.***

You will need the following items for repair:

- IVX3 Spares Kit
- IVX3 Tool Kit
- Flathead Screwdriver
- Red Grease

Note ***The IVX3 Tool Kit contains two specialized tools that are required for the correct maintenance of the valve.***

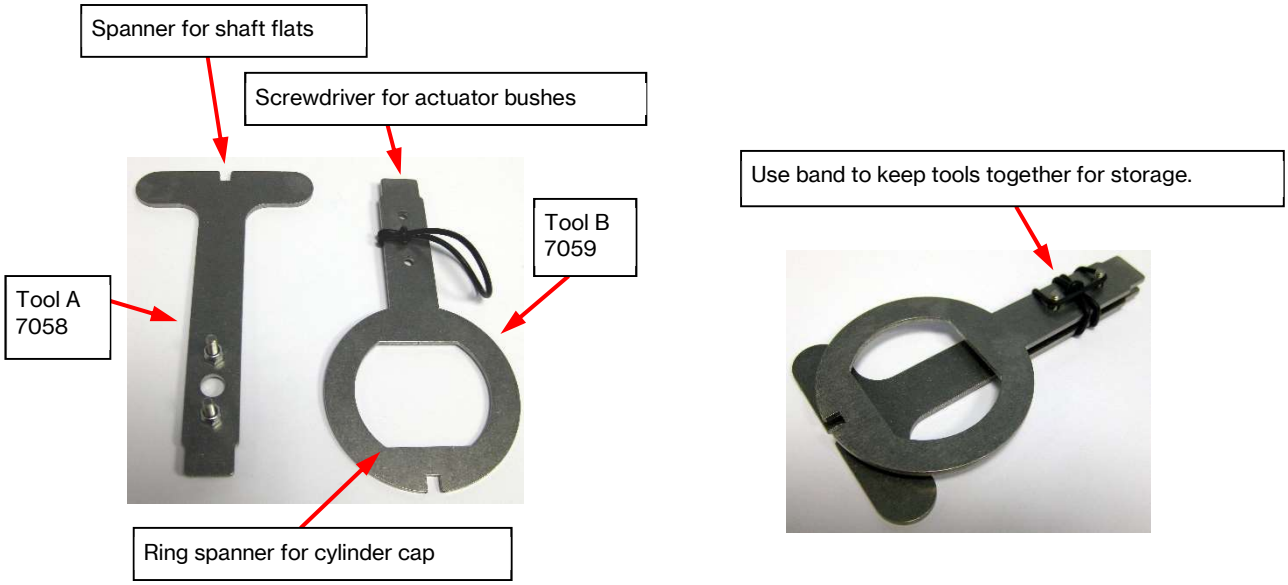

Figure 1. IVX3 Tool Kit

Hard Wearing Seal Quick Change

Figure 2. Reattach Lower Valve Body

1. Apply air to the actuator to move the valve to the **Inject** position.
2. Remove the two machine screws from the bottom of the valve.
3. Carefully remove the lower valve body from the upper valve body.
4. Reattach the lower valve body to the upper valve body using one of the machine screws.
5. Position the lower valve body as shown in Figure 2 and tighten the screw.
6. Apply air to the actuator to move the valve to the **Purge** position and fully expose the seal.

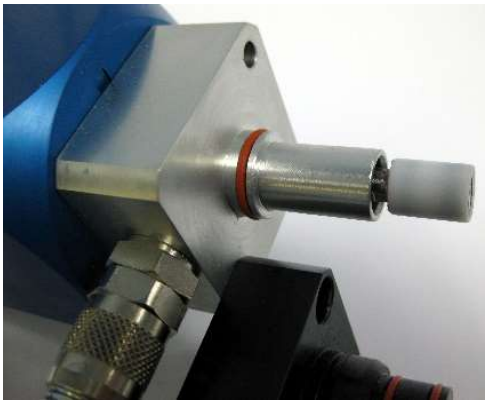

7. Use IVX3 tool A or B on the flats of the upper seal insert to stop it from turning as you unscrew the slotted screw from the end of the lower insert.

8. Remove the hard-wearing seal from the seal upper insert and press out the seal lower insert using the machine screw.
9. Replace the O-rings on both inserts, applying red grease to both.
10. Install the new hard-wearing seal onto the upper insert and then install the lower insert into the end of the new seal.
11. Apply a drop of removable thread lock compound to the end of the slotted screw and thread it into the end of the seal upper insert.
12. Use IVX3 tool A or B on the flats of the seal upper insert to stop it from turning as you tighten the slotted screw.

Note ***It is important to perform the following steps carefully to ensure the seal is not damaged during installation.***

13. Apply red grease to the hard-wearing seal to ensure that it is well-lubricated.
14. Put the valve into **Off** mode by removing the air signal from the upper port; this will pull the new seal partially back into the upper valve body.
15. Remove the lower valve body (positioned in step 4 to assist in the maintenance process) by unscrewing the single machine screw.
16. Carefully reinstall the lower valve body over the upper valve body and press firmly over the hard-wearing seal.
17. Install the two machine screws through both valve bodies and tighten into the actuator cylinder .
18. Actuate the valve to the **Purge** position and then to the **Off** position.
19. Actuate the valve to the **Inject** position and then to the **Off** position.
20. Repeat steps 18 - 19 several times to correctly seat the seal and then check for correct valve operation.
21. Allow proper drying time for the thread lock compound before using the valve assembly in production.

Disassembling Fluid Valve

22. Remove the two O-rings on the nose of the lower valve body.
23. Supply air to the actuator to move the valve to the **Inject** position.
24. Remove the two machine screws from the bottom of the valve.
25. Carefully remove the lower valve body from the upper valve body.
26. Reattach the lower valve body offset at one corner using a single machine screw, as shown in Figure 2 to assist with maintenance.
27. Apply air to the actuator to move the valve to the **Purge** position.
28. Use IVX3 tool A or B on the flats of the upper seal insert to stop it from turning as you unscrew the slotted screw from the end of the lower insert.
29. Remove the hard-wearing seal from the seal upper insert and press out the seal lower insert using the machine screw.

30. Exhaust the air from the actuator to return the valve to the **Off** position.
31. Remove the lower valve body positioned to assist in the maintenance process by unscrewing the single machine screw.
32. Carefully but firmly pull the upper valve body off the assembly.

Note ***The valve bush will be left on the end of the lower shaft, retained by the seal upper insert.***

33. Using the IVX3 tools A and B, remove the seal upper insert from the end of the lower shaft of the actuator.
34. Slide the valve bush off the end of the lower shaft.
35. Check all parts for wear and replace any damaged or worn items.

Reassembling Fluid Valve

36. Replace all old or damaged O-rings with new ones from the repair kit.
37. Apply a coat of red grease to the O-rings.
38. Place new O-rings on the valve bush and lower shaft, then slide the valve bush onto the lower shaft.
39. Apply a drop of removable thread lock compound to the end of the seal upper insert and thread it into the end of the lower shaft of the actuator, then tighten using IVX3 tools.
40. Install the upper valve body over the lower shaft and press it firmly over the valve bush and O-ring so that it is flat against the actuator cylinder.
41. Attach the lower valve body offset to one corner of the upper valve body using one of the machine screws, as shown in Figure 2.
42. Supply air to the actuator to place the valve in the **Purge** position so that the seal upper insert is visible above the upper valve body.
43. With a new O-ring installed on the seal upper insert, carefully press the new hard-wearing seal onto the seal upper insert and O-ring.
44. With a new O-ring installed on the seal lower insert, press into the end of the hard-wearing seal.
45. Apply a drop of removable thread lock compound to the end of the slotted screw and thread it into the end of the seal upper insert.

Note ***Use IVX3 tool A or B on the flats of the seal upper insert to stop it from turning as you tighten the slotted screw.***

46. Apply read grease to the hard-wearing seal to ensure it is well lubricated.
47. Remove the air signal from the upper port to put the valve in the **Off** position; this will pull the hard-wearing seal partially back into the upper valve body.
48. Remove the lower valve body from the corner and carefully reinstall over the upper valve body, pressing firmly over the hard-wearing seal.
49. Install the two machine screws through both the valve bodies and tighten into the actuator cylinder.

50. Actuate the valve to the **Purge** position and then to the **Off** position.
51. Actuate the valve to the **Inject** position and then to the **Off** position.
52. Repeat steps 50 - 51 several times to correctly seat the seal and then check for correct valve operation.
53. Allow proper drying time for the thread lock compound before using the valve assembly in production.

Repairing Actuator

You will need the following items for repair:

- IVX3 Spares Kit
- IVX3 Tool Kit
- Flathead Screwdriver
- Superblue or Molykote 111 Grease

1. Remove the two machine screws from the bottom of the valve assembly and remove the actuator from the fluid valve assembly.

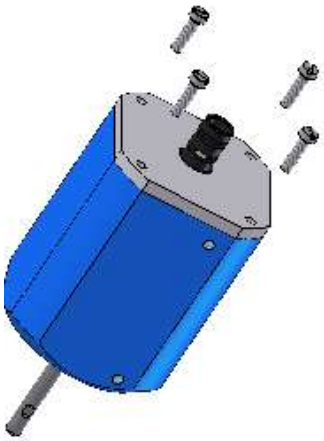

Disassemble Actuator

2. Carefully remove the four machine screws from the top of the cylinder lid.

Note ***The cylinder lid will have force on it from the upper spring.***

3. Remove the cylinder lid.
4. Remove the upper spring from inside the actuator.

5. Remove the top bush and remove the O-ring from inside.
6. Replace the top bush O-ring with a new one lubricated with Superblue or Molykote 111 grease.
7. Remove and replace the O-ring on the cylinder lid.
8. Firmly hold the actuator cylinder and press on the end of the lower shaft extending from the bottom of the actuator to remove the internal cylinder body module.

9. Install two new pneumatic seals on the internal cylinder body and lightly coat with Superblue or Molykote 111 grease.
10. Unscrew the internal cylinder cap from the internal cylinder body using the IVX3 tools.

Note ***The cylinder cap will have force applied to it from the lower spring.***

11. Pull the actuator piston assembly from the internal cylinder body.

12. Remove the lower spring.
13. Replace the two lip seals on the actuator piston assembly and lightly coat the new seals with Superblue or Molykote 111 grease.
14. Replace the O-rings on the actuator bottom bush with new lubricated O-rings.

Reassemble Actuator

15. Install the lower spring onto the lower shaft of the actuator piston and push the assembly into the interior cylinder body.

Note ***The lower shaft goes through the hole in the bottom of the cylinder body.***

16. Pushing firmly, screw the interior cylinder cap onto the interior cylinder body.
17. Using the IVX3 tools, snug the cap tight.
18. Install the actuator interior cylinder body assembly with new lip seal into the cylinder body, with the lower shaft going through the hole in the bottom.
19. Put the upper spring into the actuator cylinder on top of the internal cylinder cap.
20. Install the cylinder lid onto the actuator cylinder over the upper shaft.

Note ***The upper shaft will show in the top bush in the cylinder lid.***

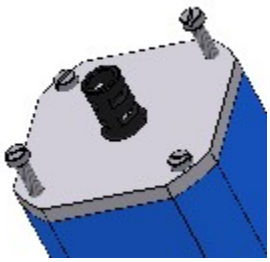

21. Start the four machine screws into the actuator cylinder lid, then press the lid down firmly and screw two of the screws opposite each other down, then finish tightening the other two.

22. Apply air alternately to the **Purge** and **Inject** signal ports and make sure the actuator operates correctly.

Note ***See the Testing Valve section for further information if the actuator is not operating as expected.***

23. Reattach the fluid valve section.

Testing Valve

After servicing an IVX3, fully test the operation before using the valve in production.

You need the following to test the valve:

- IVX3 Service Module
- Soapy Water

Note ***During service test the actuator before fitting it to the fluid section.***

Note ***See the IVX3 Service Module manual for more detailed instructions on its use.***

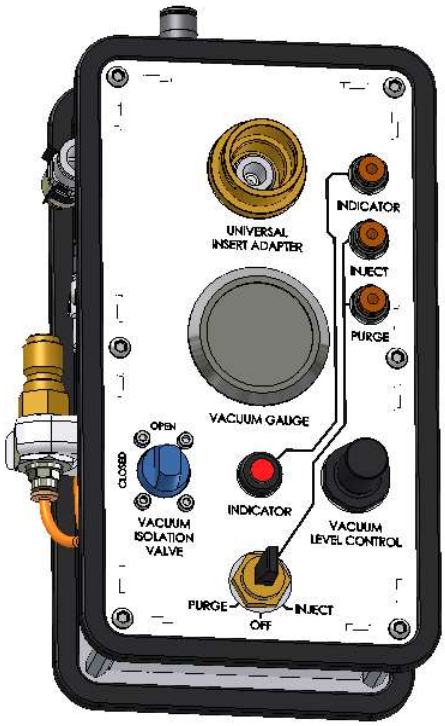

Figure 3. IVX3 Service Module

Test Actuator

1. Connect the purge outlet on top of the service module to the purge signal port on the IVX3.
2. Connect the inject outlet on top of the service module to the inject signal port on the IVX3.
3. Operate the switch on the service module and put the valve in the **Inject** position.
4. Ensure the actuator shaft assembly moves freely through its full range of travel and that the top of the shaft is visible in the upper slot of the top bush.
5. Move the switch on the service module to the center to exhaust the air from the inject port.
6. Ensure the IVX3 shaft assembly moves freely back to the unactuated position.
7. Operate the switch on the service module and put the valve in the **Purge** position.
8. Ensure the actuator shaft assembly moves freely through its full range of travel and that the top of the shaft is visible only in the lower slot of the top bush.
9. Move the switch on the service module to the center and exhaust the air from the inject port.
10. Ensure the IVX3 shaft assembly moves freely back to the unactuated position.
11. Repeat steps 3 - 10 several times to ensure correct operation.
12. Put the IVX3 into the **Purge** position and then squirt some soapy water around the top bush to check for air leaks.
13. Choose one of these options:

- *If you do not have the fluid section attached to the actuator:* Put the IVX3 into the **Inject** position and then squirt some soapy water around the bottom bush to check for air leaks.
- *If you have the fluid section attached to the actuator:* Put the IVX3 into the **Inject** position and then squirt some soapy water in the isolation channel between the cylinder body and the fluid valve section.

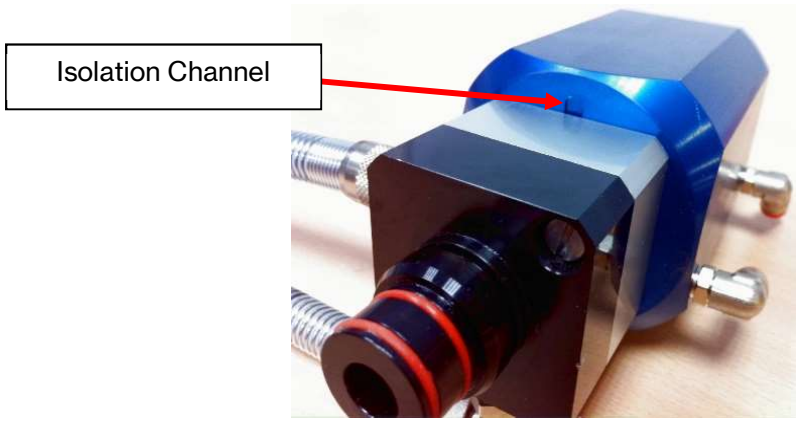

14. If there are any noticeable leaks, check for and remedy any of the following:

- Bush is tightened and thread locker applied
- O-ring in good condition
- Bush in good condition
- Actuator shaft is not damaged

Test Vacuum Integrity of Fluid Section

15. Ensure the resin inlet and purge outlet hoses are exhausted and not connected to any equipment.
16. Insert the lower valve body nose into the universal insert on top of the IVX3 service module.
17. Connect the inject output on the top of the service module to the inject signal port on the IVX3.
18. Connect the purge output on top of the service module to the inject signal port on the IVX3.
19. Ensure the valve is not actuated (no air supplied to either pilot) and the valve is in the closed position.
20. Open the isolation valve on the service module and then adjust the vacuum level at the universal insert to the maximum level (80% + vacuum).
21. If the maximum vacuum level cannot be reached, do the following:

- Check the test equipment by plugging the universal insert and ensuring a high vacuum can be achieved
- Check the two O-rings on the IVX3 are in good condition.

22. If neither scenario is causing the issue, the valve seal is leaking an unacceptable amount; service the valve fluid section.
23. Once a suitable vacuum level is reached, close the isolation valve on the service module to isolate the vacuum source from the IVX3's injection port.

24. Make sure the level on the vacuum gauge remains stationary and the vacuum is maintained.
25. Actuate the IVX3 to the Purge position.
26. Make sure the vacuum level is maintained following a slight decrease as the seal moves.

Note ***It is important the valve does not leak in the purge position. In production this would cause air to be drawn into the part during the curing cycle.***

27. Operate the valve between closed and purge a number of time to ensure the vacuum level is maintained.
28. Operate the valve to the inject position.
29. Make sure the vacuum is exhausted and the gauge returns to zero.

Note ***Once a suitable vacuum level is achieved, you may turn off the vacuum generator (source). If the valve is not leaking, this level will be maintained.***

Test Pressure for the Fluid Section

WARNING

During pressure testing, ensure the valve's resin injection port is directed away from yourself and others. Some of the tests will vent air through this port.

30. Place the valve on a bench and ensure the injection port is not connected to anything.
31. Connect the inject output on top of the service module to the inject signal port on the IVX3.
32. Connect the purge output on the top of the service module to the purge signal port on the IVX3.
33. Ensure the IVX3 is in the closed position.
34. Connect the IVX3 purge outlet to the indicator on the service module.
35. Connect the IVX3 resin inlet to the pressure output on the service module (90 – 100 psi/6 – 7 bar) and check the indicator/gauge.

Note ***If pressure is reading, the valve is leaking between the resin inlet and purge outlet.***

36. Apply soapy water to the seal in the lower valve body and look for bubbling that would indicate a leak.

Note ***Do not point the resin outlet directly at yourself. It is acceptable to have a small leak here.***

37. Operate the IVX3 to the purge position; the indicator should now show pressure.
38. Once again, apply soapy water to the seal and check for leaks; there should not be any leaks if this is in good condition.
39. Apply soapy water to the fluid section where the lower valve body and upper valve body join and check for leaks.

40. Apply soapy water to the fluid section where the upper valve body and actuator cylinder join and check for leaks, particularly at the isolation channel; a leak here could indicate a problem with the valve bush or fitted O-rings.
41. Point the IVX3 away from yourself and operate to the inject position; air should vent out of the resin inject port.
42. Close the valve.
43. Operate the IVX3 between the closed/inject/purge/closed positions a number of times and ensure that the shaft is moving freely.

Note ***When testing is complete, residual pressure can remain in the hoses connected to the resin inlet and purge outlet. Use caution when disconnecting the valve.***

Parts Drawings

The following drawings are included for reference when repairing or ordering parts:

Parts Drawings	
Part Number	**Description**
8010	IVX3 Injection Valve Assembly
ASSY-0473	IVX3 Actuator Assembly
ASSY-0483	IVX3 Fluid Valve Only Assembly

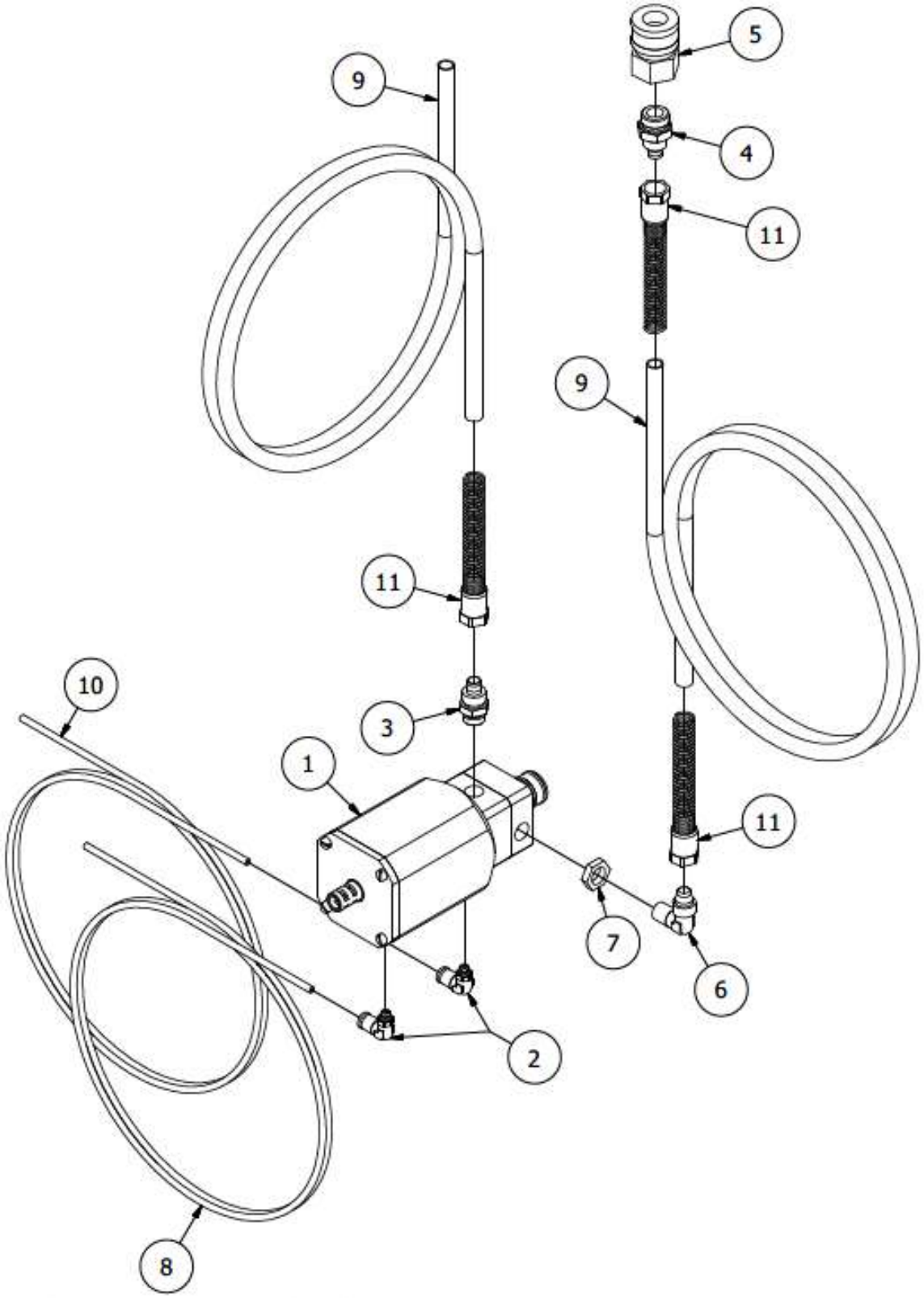

MAGNUM VENUS PLASTECH LTD

TITLE: IVX3			PART NUM: 8010
REV: B	DRAWN BY: STEPHEN WARDEN	SHEET: 1 / 2	DATE: 09/03/2012

PARTS LIST			
ITEM	QTY	PART NUMBER	DESCRIPTION
1	1	ASSY-0483	IVX3 - VALVE ONLY
2	2	0645	ELBOW MALE STUD SWIVEL 4MM-M5
3	1	0664	10MM - 1/4 BSP QF MS
4	1	2575	10MM - 3/8 BSP QF MS
5	1	0462	AUTOSPRUE FEMALE RESIN CONNECT
6	1	7046	FIXED MALE ELB 10MM X G1/4
7	1	7036	1/4 BSP LOCK NUT
8	1.5M	0207	TUBING NYLON 4/2.5 RED
9	3M	0214	TUBING NYLON CLEAR 10MM
10	1.5M	0206	TUBING NYLON 4/2.5 BLUE
11	3	4231	ANTI KINK TUBE NUT 10/8

MAGNUM VENUS PLASTECH LTD

TITLE: IVX3			PART NUM: 8010
REV: B	DRAWN BY: STEPHEN WARDEN	SHEET: 2 / 2	DATE: 09/03/2012

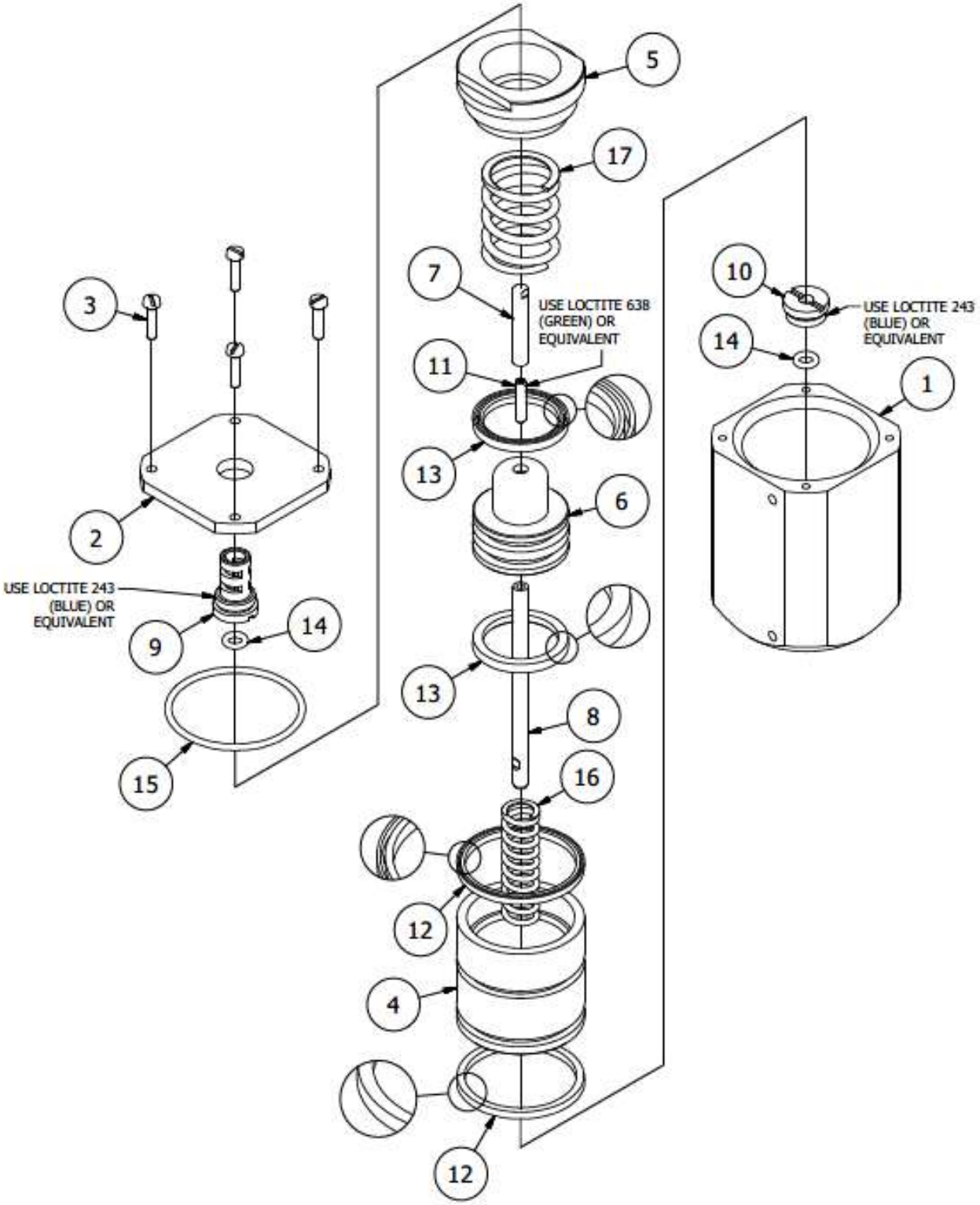

MAGNUM VENUS PLASTECH LTD

TITLE: IVX3 ACTUATOR			PART NUM: ASSY-0473
REV: A	DRAWN BY: STEPHEN WARDEN	SHEET: 1 / 2	DATE: 16/03/2012

PARTS LIST			
ITEM	QTY	PART NUMBER	DESCRIPTION
1	1	6981	IVX3 ACTUATOR CYLINDER
2	1	6980	IVX3 ACTUATOR CYLINDER LID
3	4	7056	M4 X 16 SLOT CHEESE MACHINE SCREW DIN 84 ST/ST
4	1	6974	IVX3 ACTUATOR INT CYL BODY
5	1	6975	IVX3 ACTUATOR INT CYL CAP
6	1	6973	IVX3 ACTUATOR PISTON
7	1	6976	IVX3 UPPER SHAFT
8	1	6977	IVX3 LOWER SHAFT
9	1	6982	IVX3 ACTUATOR TOP BUSH
10	1	6983	IVX3 ACTUATOR BOTTOM BUSH
11	1	5850	M4 X 20 SOCKET SET SCREW
12	2	7039	PNEUMATIC SEAL 1.75X2X0.137IN
13	2	5836	TAS LIP SEAL
14	2	7044	O RING 5.6MM X 2.4MM
15	1	7045	O RING 1.987IN X 0.103IN
16	1	7040	IVX3 LOWER SPRING
17	1	7041	IVX3 UPPER SPRING

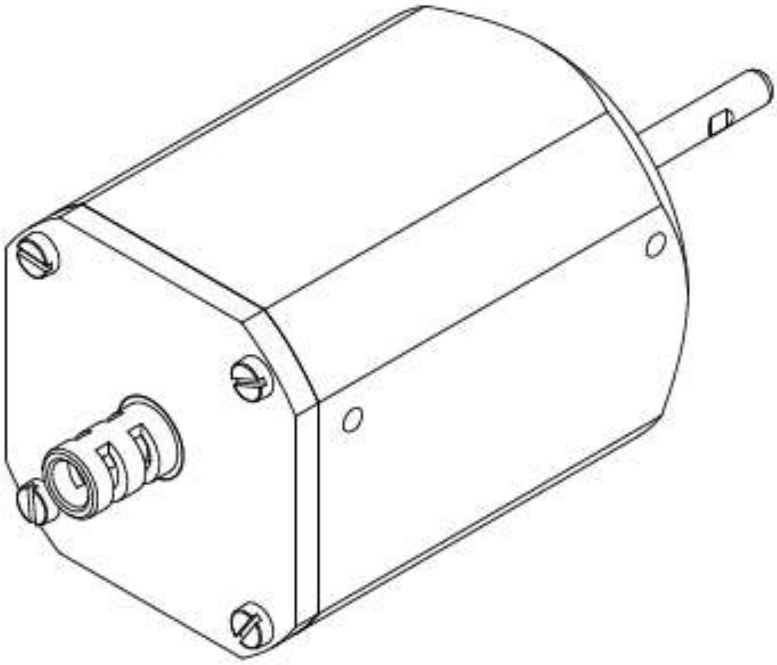

MAGNUM VENUS PLASTECH LTD

TITLE: IVX3 ACTUATOR			PART NUM: ASSY-0473
REV: A	DRAWN BY: STEPHEN WARDEN	SHEET: 2 / 2	DATE: 16/03/2012

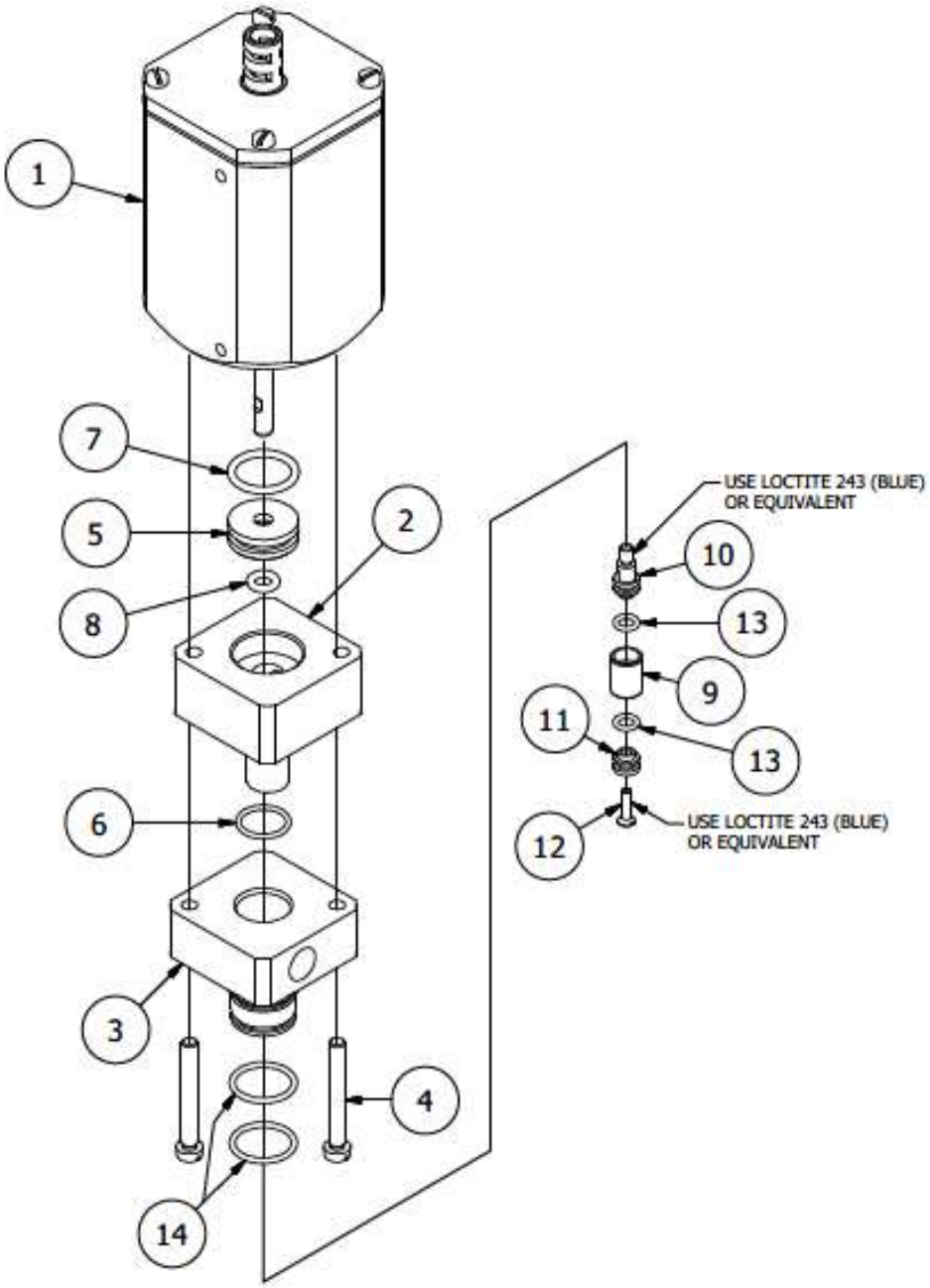

MAGNUM VENUS PLASTECH LTD

TITLE: IVX3 - VALVE ONLY			PART NUM: ASSY-0483
REV:	DRAWN BY: STEPHEN WARDEN	SHEET: 1 / 2	DATE: 23/09/2011

PARTS LIST			
ITEM	QTY	PART NUMBER	DESCRIPTION
1	1	ASSY-0473	IVX3 ACTUATOR
2	1	6985	IVX3 UPPER VALVE BODY
3	1	6986	IVX3 LOWER VALVE BODY
4	2	7057	M5 X 40 SLOT CHEESE MACHINE SCREW DIN 84 A2 ST/ST
5	1	7052	IVX3 VALVE BUSH - HARD WEARING
6	1	7042	O RING 14.1MM X 1.6MM
7	1	7049	O RING 17.6MM X 2.4MM
8	1	7044	O RING 5.6MM X 2.4MM
9	1	7051	IVX3 SEAL - HARD WEARING
10	1	6978	IVX3 SEAL UPPER INSERT
11	1	6979	IVX3 SEAL LOWER INSERT
12	1	7055	M3 X 12MM S/STEEL SLOT CSK SCREW
13	2	6988	O RING 5.1MM X 1.6MM
14	2	3265	O RING CATALYST PUMP

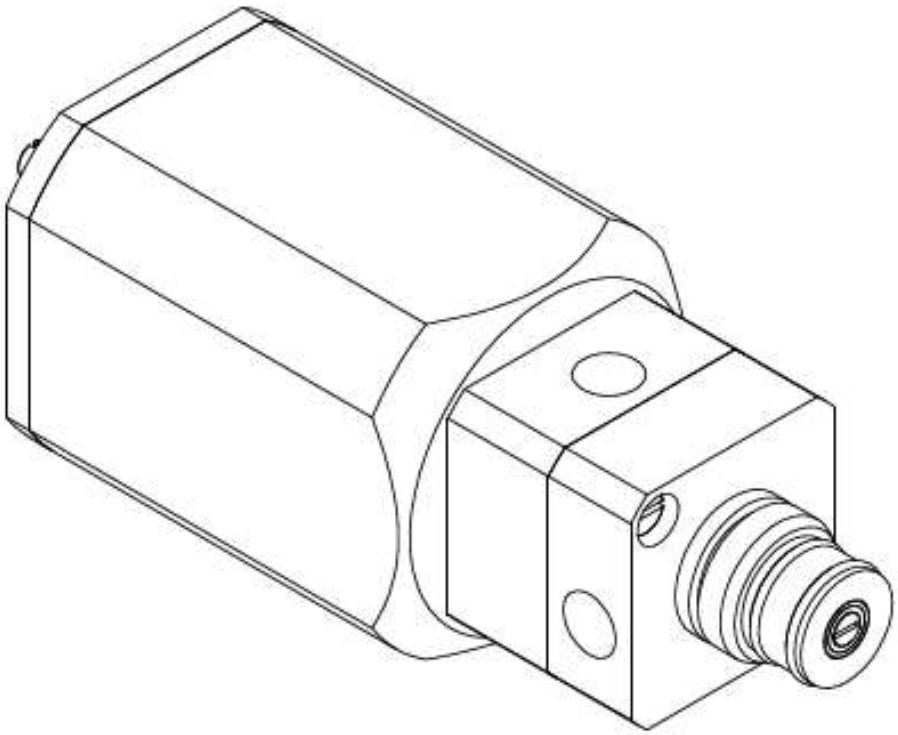

MAGNUM VENUS PLASTECH LTD

TITLE: IVX3 - VALVE ONLY			PART NUM: ASSY-0483
REV:	DRAWN BY: STEPHEN WARDEN	SHEET: 2 / 2	DATE: 23/09/2011

CORPORATE HEADQUARTERS
2030 Falling Waters Rd, Suite 350, Knoxville, TN 37922 · USA · Tel: (865) 686-5670

DISTRIBUTION AND PURCHASING
642 Barbrow Ln, Knoxville, TN 37932 · USA · Tel: (865) 684-4416

TECHNOLOGY CENTER AND MANUFACTURING
1862 Ives Ave, Kent, WA 98032 · USA · Tel (253) 854-2660 · Fax (253) 854-1666

E-mail: info@mvpind.com

For a list of international distributors, visit our website at :

www.mvpind.com/mvp-international