IVX3 Service Module

Manual

This manual is applicable to the following models:

- 8018

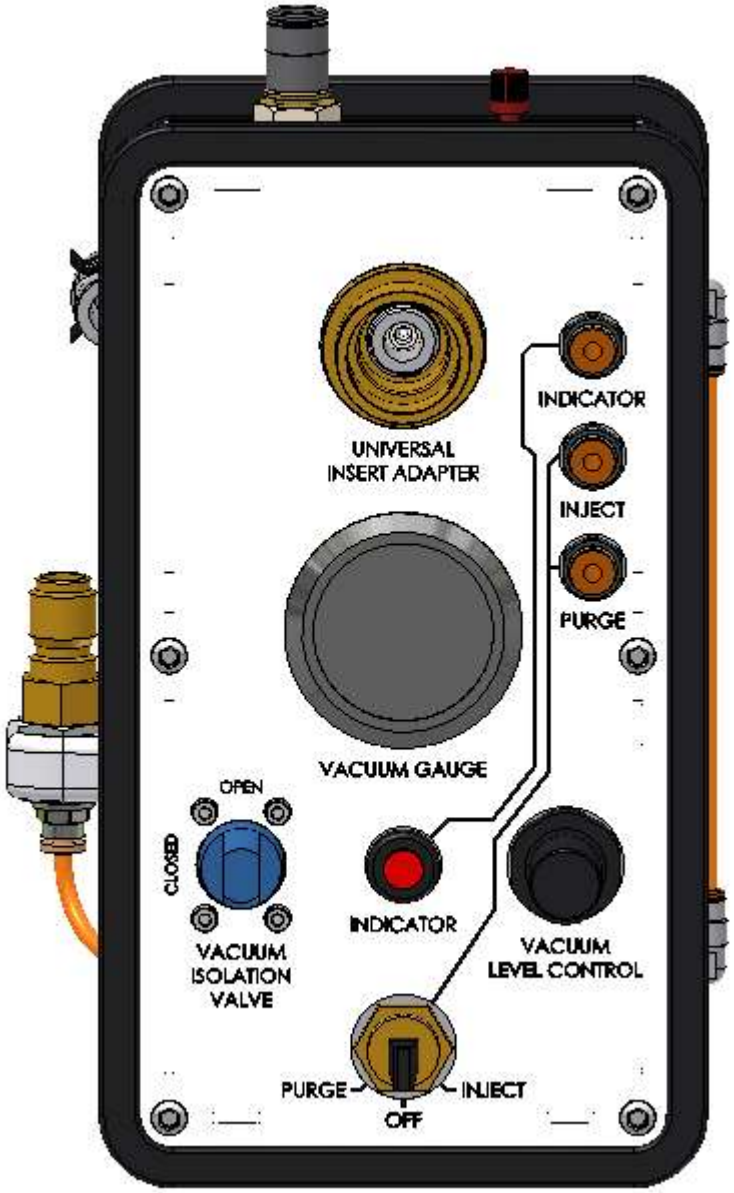

MAGNUM VENUS PRODUCTS

Rev. March 2019

CORPORATE HEADQUARTERS
2030 Falling Waters Rd, Suite 350, Knoxville, TN 37922 · USA · Tel: (865) 686-5670

DISTRIBUTION AND PURCHASING
642 Barbrow Ln, Knoxville, TN 37932 · USA · Tel: (865) 684-4416

TECHNOLOGY CENTER AND MANUFACTURING
1862 Ives Ave, Kent, WA 98032 · USA · Tel (253) 854-2660 · Fax (253) 854-1666

E-mail: info@mvpind.com

For a list of international distributors, visit our website at :

www.mvpind.com/mvp-international

Table of Contents

Safety & Warning Information

Warnings

Due to the vast number of chemicals that could be used and their varying chemical reactions, the buyer and user of this equipment should determine all factors relating to the fluids used, including any of the potential hazards involved. Particular inquiry and investigation should be made into potential dangers relating to toxic fumes, fires, explosions, reaction times, and exposure of human beings to the individual components or their resultant mixtures. MVP assumes no responsibility for loss, damage, expense or claims for bodily injury or property damage, direct or consequential, arising from the use of such chemical components.

The end user is responsible for ensuring that the end product or system complies with all the relevant laws in the country where it is to be used and that all documentation is adhered to.

Recommended Occupational Safety & Health Act (OSHA) Documentation:

- 1910.94 Pertaining to ventilation
- 1910.106 Pertaining to flammable liquids
- 1910.107 Pertaining to spray finishing operations, particularly paragraph (m), Organic Peroxides and Dual Component Coatings

For Additional information, contact the Occupational Safety and Health Administration (OSHA) at https://www.osha.gov/about.html.

Recommended National Fire Protection Association (NFPA) Documentation:

- NFPA No.33 Chapter 14 Organic Peroxides and Dual Component Materials
- NFPA No. 63 Dust Explosion Prevention
- NFPA No. 70 National Electrical Code
- NFPA No. 77 Static Electricity
- NFPA No. 91 Blower and Exhaust System
- NFPA No. 654 Plastics Industry Dust Hazards

Fire Extinguisher – code ABC, rating number 4a60bc using Extinguishing Media –Foam, Carbon Dioxide, Dry Chemical, Water Fog, is recommended for this product and applications.

The following general warnings and guidelines are for the setup, use, grounding, maintenance, and repair of equipment. Additional product-specific warnings may be found throughout this manual as applicable. Please contact your nearest MVP Technical Service Representative if additional information is needed.

Safety Precautions
• Avoid skin contact and inhalation of all chemicals.
• Review Material Safety Data Sheet (MSDS) to promote the safe handling of chemicals in use.
• Restrict the use of all chemicals to designated areas with good ventilation.
• Chemicals are flammable and reactive.
• Noxious fumes released when combusted.
• Operate equipment in a ventilated environment only.
• Uncured liquid resins are highly flammable unless specifically labeled otherwise.
• Cured laminate, accumulations of overspray, and laminate sandings are highly combustible.
• Do not operate or move electrical equipment when flammable fumes are present.
• Ground all equipment.
• If a spark is seen or felt, immediately halt operation. Do not operate the equipment until the issue has been identified and repaired.
• Contaminated catalyst may cause fire or explosion.
• Containers may explode if exposed to fire / heat.
• Use and store chemicals away from heat, flames, and sparks.
• Do not smoke in work areas or near stored chemicals.
• Do not mix Methyl Ethyl Ketone Peroxide (MEKP) with materials other than polyethylene.
• Do not dilute MEKP.
• Keep food and drink away from work area.


Physical Hazards
• Never look directly into the spray gun fluid tip. Serious injury or death can result.
• Never aim the spray gun at or near another person. Serious injury or death can result.
• Chemical compounds can be severely irritating to the eyes and skin.
• Inhalation, ingestion, or injection may damage internal organs and lead to pulmonary disorders, cancers, lymphomas, and other diseases or health conditions.
• Other potential health effects include: irritation of the eyes and upper respiratory tract, headache, light-headedness, dizziness, confusion, drowsiness, nausea, vomiting, and occasionally abdominal pain.
• Eye contact: Immediately flush with water for at least 15 minutes and seek immediate medical attention.
• Skin Contact: Immediately wash with soap and water and seek immediate medical attention.
• Inhalation: Move the person to fresh air and seek immediate medical attention.
• Do not remove shields, covers, or safety features on equipment that is in use.
• Never place fingers, hands, or any body part near or directly in front of the spray gun fluid tip. The force of the liquid as it exits the spray tip can shoot liquid through the skin.
• Keep hands and body parts away from any moving equipment or components.
• Do not stand under plunger
• An improperly loaded drum may lead to an imbalance, causing a unit to tip over
 

Personal Protective Equipment (PPE)
• MVP recommends the use of personal safety equipment with all products in our catalog.
• Wear safety goggles, hearing protection, a respirator, and chemical resistant gloves.
• Wear long sleeve shirts or jackets and pants to minimize skin exposure.
• PPE should be worn by operators and service technicians to reduce the risk of injury.


For Additional information, contact the Occupational Safety and Health Administration (OSHA). https://www.osha.gov/about.html

Symbol Definitions

Indicates the risk of contact with chemicals that are hazardous, which may lead to injury or death.

Indicates the risk of contact with voltage / amperage that may lead to serious injury or death

Indicates that the materials being used are susceptible to combustion

Indicates the risk of contact with moving components that may lead to serious injury or death.

Indicates that the system or component should be grounded before proceeding with use or repair.

Indicates the use of lit cigarettes or cigars is prohibited, because the materials being used are susceptible to combustion.

Indicates that the materials and/or the process being performed can lead to ignition and explosion.

A recommendation for the use of Personal Protective Equipment (PPE) before using or repairing the product.

Polymer Matrix Materials: Advanced Composites

Potential health hazards associated with the use of advanced composites can be controlled through the implementation of an effective industrial hygiene and safety program.

https://www.osha.gov/dts/osta/otm/otm_iii/otm_iii_1.html#t iii:1_1

Resins		
Composite Component	**Organ System Target (Possible Target)**	**Known (Possible) Health Effect**
Epoxy resins	Skin, lungs, eyes	Contact and allergic dermatitis, conjunctivitis
Polyurethane resins	Lungs, skin, eyes	Respiratory sensitization, contact dermatitis, conjunctivitis
Phenol formaldehyde	Skin, lungs, eyes	As above (potential carcinogen)
Bismaleimides (BMI)	Skin, lungs, eyes	As above (potential carcinogen)
Polyamides	Skin, lungs, eyes	As above (potential carcinogen)
Reinforcing materials		
Composite Component	**Organ System Target (Possible Target)**	**Known (Possible) Health Effect**
Aramid fibers	Skin (lungs)	Skin and respiratory irritation, contact dermatitis (chronic interstitial lung disease)
Carbon/graphite fibers	Skin (lungs)	As noted for aramid fibers
Glass fibers (continuous filament)	Skin (lungs)	As noted for aramid fibers
Hardeners and curing agents		
Composite Component	**Organ System Target (Possible Target)**	**Known (Possible) Health Effect**
Diaminodiphenylsulfone	N/A	No known effects with workplace exposure
Methylenedianiline	Liver, skin	Hepatotoxicity, suspect human carcinogen
Other aromatic amines		
Composite Component	**Organ System Target (Possible Target)**	**Known (Possible) Health Effect**
Meta-phenylenediamine (MPDA)	Liver, skin (kidney, bladder)	Hepatitis, contact dermatitis (kidney and bladder cancer)
Aliphatic andcyclo-aliphatic amines	Eyes, skin	Severe irritation, contact dermatitis
Polyaminoamide	Eyes, skin	Irritation (sensitization)
Anhydride	Eyes, lungs, skin	Severe eye and skin irritation, respiratory sensitization, contact dermatitis

Catalyst - Methyl Ethyl Ketone Peroxide (MEKP)

MEKP is among the more hazardous materials found in commercial channels. The safe handling of the "unstable (reactive)" chemicals presents a definite challenge to the plastics industry. The highly reactive property which makes MEKP valuable to the plastics industry in producing the curing reaction of polyester resins also produces the hazards which require great care and caution in its storage, transportation, handling, processing and disposal. MEKP is a single chemical. Various polymeric forms may exist which are more or less hazardous with respect to each other. These differences may arise not only from different molecular structures (all are, nevertheless, called "MEKP") and from possible trace impurities left from the manufacture of the chemicals, but may also arise by contamination of MEKP with other materials in its storage or use. Even a small amount of contamination with acetone, for instance, may produce an extremely shock-sensitive and explosive compound.

WARNING

Contamination with promoters, materials containing promoters (such as laminate sandings), or with any readily oxidizing material (such as brass or iron) will cause exothermic redox reactions which can be explosive in nature. Heat applied to MEKP or heat buildup from contamination reactions can cause the material to reach its Self-Accelerating Decomposition Temperature (SADT).

Researchers have reported measuring pressure rates-of-rise well over 100,000 psi per second when certain MEKP's reach their SADT. For comparison, the highest-pressure rate-of-rise listed in NFPA Bulletin NO.68, "Explosion Venting", is 12,000 psi per second for an explosion of 12% acetylene and air. The maximum value listed for a hydrogen explosion is 10,000 psi per second. Some forms of MEKP, if allowed to reach their SADT, will burst even an open topped container. This suggests that it is not possible to design a relief valve to vent this order of magnitude of pressure rate-of-rise. The user should be aware that any closed container, be it a pressure vessel, surge chamber, or pressure accumulator, could explode under certain conditions. There is no engineering substitute for care by the user in handling organic peroxide catalysts. If, at any time, the pressure relieve valve on top of the catalyst tank should vent, the area should be evacuated at once and the fire department called. The venting could be the first indication of a heat, and therefore, pressure build-up that could eventually lead to an explosion. Moreover, if a catalyst tank is sufficiently full when the pressure relief valve vents, some catalyst may spray out, which could cause eye injury. For this reason, and many others, anyone whose job puts them in an area where this vented spray might go, should always wear full eye protection even when laminating operations are not taking place.

Safety in handling MEKP depends to a great extent on employee education, proper safety instructions, and safe use of the chemicals and equipment. Workers should be thoroughly informed of the hazards that may result from improper handling of MEKP, especially regarding contamination, heat, friction and impact. They should be thoroughly instructed regarding the proper action to be taken in the storage, use, and disposal of MEKP and other hazardous materials used in the laminating operation. In addition, users should make every effort to:

- Store MEKP in a cool, dry place in original containers away from direct sunlight and away from other chemicals.
- Keep MEKP away from heat, sparks, and open flames.
- Prevent contamination or MEKP with other materials, including polyester over spray and sandings, polymerization accelerators and promoters, brass, aluminum, and non-stainless steels.

- Never add MEKP to anything that is hot, since explosive decomposition may result.
- Avoid contact with skin, eyes, and clothing. Protective equipment should be worn at all times. During clean-up of spilled MEKP, personal safety equipment, gloves, and eye protection must be worn. Firefighting equipment should be at hand and ready.
- Avoid spillage, which can heat up to the point of self-ignition.
- Repair any leaks discovered in the catalyst system immediately, and clean-up the leaked catalyst at once in accordance with the catalyst manufacturer's instructions.
- Use only original equipment or equivalent parts from Magnum Venus Products in the catalyst system (i.e.: hoses, fitting, etc.) because a dangerous chemical reaction may result between substituted parts and MEKP.
- Catalyst accumulated from the purging of hoses or the measurement of fluid output deliveries should never be returned to the supply tank, such catalyst should be diluted with copious quantities of clean water and disposed of in accordance with the catalyst manufacturer's instructions.

The extent to which the user is successful in accomplishing these ends and any additional recommendations by the catalyst manufacturer determines largely the safety that will be present in his operation.

Clean-Up Solvents and Resin Diluents

WARNING

A hazardous situation may be present in your pressurized fluid system! Hydro carbon solvents can cause an explosion when used with aluminum or galvanized components in a closed (pressurized) fluid system (pump, heaters, filters, valves, spray guns, tanks, etc.). An explosion could cause serious injury, death, and/or substantial property damage. Cleaning agents, coatings, paints, etc. may contain Halogenated Hyrdrocarbon solvents. Some Magnum Venus Products spray equipment includes aluminum or galvanized components and will be affected by Halogenated Hydrocarbon solvents.

There are three key elements to the Halogenated Hyrdocarbon (HHC) solvent hazard.

1.	The presence of HHC solvents.	1,1,1 – Trichloroethane and Methylene Chloride are the most common of these solvents. However, other HHC solvents are suspect if used; either as part of paint or adhesives formulation, or for clean-up flushing.
2.	Aluminum or Galvanized Parts.	Most handling equipment contains these elements. In contact with these metals, HHC solvents could generate a corrosive reaction of a catalytic nature.
3.	Equipment capable of withstanding pressure.	When HHC solvent contact aluminum or galvanized parts inside a closed container such as a pump, spray gun, or fluid handling system, the chemical reaction can, over time, result in a build-up of heat and pressure, which can reach explosive proportions. When all three elements are present, the result can be an extremely violent explosion. The reaction can be sustained with very little aluminum or galvanized metal; any amount of aluminum is too much.

- The reaction is unpredictable. Prior use of an HHC solvent without incident (corrosion or explosion) does NOT mean that such use is safe. These solvents can be dangerous alone (as a clean-up or flushing agent) or when used as a component or a coating material. There is no known inhibitor that is effective under all circumstances. Mixing HHC solvents with other materials or solvents such as MEKP, alcohol, or toluene may render the inhibitors ineffective.
- The use of reclaimed solvents is particularly hazardous. Reclaimers may not add any inhibitors. The possible presence of water in reclaimed solvents could also feed the reaction.
- Anodized or other oxide coatings cannot be relied upon to prevent the explosive reaction. Such coatings can be worn, cracked, scratched, or too thin to prevent contact. There is no known way to make oxide coatings or to employ aluminum alloys to safely prevent the chemical reaction under all circumstances.
- Several solvent suppliers have recently begun promoting HHC solvents for use in coating systems. The increasing use of HHC solvents is increasing the risk. Because of their exemption from many state implementation plans as Volatile Organic Compounds (VOCs), their low flammability hazard, and their not being classified as toxic or carcinogenic substances, HHC solvents are very desirable in many respects.

WARNING

Do not use Halogenated Hydrocarbon (HHC) solvents in pressurized fluid systems having aluminum or galvanized wetted parts.
Magnum Venus Products is aware of NO stabilizers available to prevent HHC solvents from reaction under all conditions with aluminum components in closed fluid systems. HHC solvents are dangerous when used with aluminum components in a closed fluid system.

- Consult your material supplier to determine whether your solvent or coating contains Halogenated Hydrocarbon solvents.
- Magnum Venus Products recommends that you contact your solvent supplier regarding the best non-flammable clean-up solvent with the heat toxicity for your application.
- If, however, you find it necessary to use flammable solvents, they must be kept in approved, electrically grounded containers.
- Bulk solvent should be stored in a well-ventilated, separate building, 50 feet away from your main plant.
- You should only allow enough solvent for one day's use in your laminating area.
- NO SMOKING signs must be posted and observed in all areas of storage or where solvents and other flammable materials are used.
- Adequate ventilation (as covered in OSHA Section 1910.94 and NFPA No.91) is important wherever solvents are stored or used, to minimize, confine and exhaust the solvent vapors.
- Solvents should be handled in accordance with OSHA Section 1910.106 and 1910.107.

Catalyst Diluents

Magnum Venus Products spray-up and gel-coat systems currently produced are designed so that catalyst diluents are not required. Magnum Venus Products therefore recommends that diluents not be used to avoid possible contamination which could lead to an explosion due to the handling and mixing of MEKP and diluents. In addition, it eliminates any problems from the diluent being contaminated through rust particles in drums, poor quality control on the part of the diluents suppliers, or any other reason. If diluents are absolutely required, contact your catalyst supplier and follow his instructions explicitly. Preferably the supplier should premix the catalyst to prevent possible "on the job" contamination while mixing.

WARNING

If diluents are not used, remember that catalyst spillage and gun, hose, and packing leaks are potentially more hazardous since each drop contains a higher concentration of catalyst and will therefore react more quickly with overspray and the leak.

Cured Laminate, Overspray and Laminate Sandings Accumulation

- Remove all accumulations of overspray, Fiberglass Reinforced Plastic (FRP) sandings, etc. from the building as they occur. If this waste is allowed to build up, spillage of catalyst is more likely to start a fire; in addition, the fire would burn hotter and longer.
- Floor coverings, if used, should be non-combustible.
- Spilled or leaked catalyst may cause a fire if it comes in contact with an FRP product, over-sprayed chop or resin, FRP sandings or any other material with MEKP.

To prevent spillage and leakage, you should:

1.	Maintain your Magnum Venus Products System.	Check the gun several times daily for catalyst and resin packing or valve leaks. REPAIR ALL LEAKS IMMEDIATELY.
2.	Never leave the gun hanging over or lying inside the mold.	A catalyst leak in this situation would certainly damage the part, possibly the mold, and may cause a fire.
3.	Inspect resin and catalyst hoses daily for wear or stress at the entry and exits of the boom sections and at the hose and fittings.	Replace if wear or weakness is evident or suspected.
4.	Arrange the hoses and fiberglass roving guides so that the fiberglass strands DO NOT rub against any of the hoses at any point.	If allowed to rub, the hose will be cut through, causing a hazardous leakage of material which could increase the danger of fire. Also, the material may spew onto personnel in the area.

Toxicity of Chemicals

- Magnum Venus Products recommends that you consult OSHA Sections 1910.94, 1910.106, 1910.107 and NFPA No.33, Chapter 14, and NFPA No.91.
- Contact your chemical supplier(s) and determine the toxicity of the various chemicals used as well as the best methods to prevent injury, irritation and danger to personnel.
- Also determine the best methods of first aid treatment for each chemical used in your plant.

Equipment Safety

Magnum Venus Products suggest that personal safety equipment such as EYE GOGGLES, GLOVES, EAR PROTECTION, and RESPIRATORS be worn when servicing or operating this equipment. Ear protection should be worn when operating a fiberglass chopper to protect against hearing loss since noise levels can be as high as 116 dB (decibels). This equipment should only be operated or serviced by technically trained personnel!

CAUTION

Never place fingers, hands, or any body part near or directly in front of the spray gun fluid tip. The force of the liquid as it exits the spray tip can cause serious injury by shooting liquid through the skin. NEVER LOOK DIRECTLY INTO THE GUN SPRAY TIP OR POINT THE GUN AT OR NEAR ANOTHER PERSON OR AN ANIMAL.

DANGER

Contaminated catalyst may cause fire or explosion. Before working on the catalyst pump or catalyst accumulator, wash hands and tools thoroughly. Be sure work area is free from dirt, grease, or resin. Clean catalyst system components with clean water daily.

DANGER

Eye, skin, and respiration hazard. The catalyst MEKP may cause blindness, skin irritation, or breathing difficulty. Keep hands away from face. Keep food and drink away from work area.

Treatment of Chemical Injuries

CAUTION

Refer to your catalyst manufacturer's safety information regarding the safe handling and storage of catalyst. Wear appropriate safety equipment as recommended.

Great care should be used in handling the chemicals (resins, catalyst and solvents) used in polyester systems. Such chemicals should be treated as if they hurt your skin and eyes and as if they are poison to your body. For this reason, Magnum Venus Products recommends the use of protective clothing and eye wear in using polyester systems. However, users should be prepared in the event of such an injury.

Precautions include:

1. Know precisely what chemicals you are using and obtain information from your chemical supplier on what to do in the event the chemical gets onto your skin or into the eyes, or if swallowed.
2. Keep this information together and easily available so that it may be used by those administering first aid or treating the injured person.
3. Be sure the information from your chemical supplier includes instructions on how to treat any toxic effects the chemicals have.

WARNING

Contact your doctor immediately in the event of an injury. If the product's MSDS includes first aid instructions, administer first aid immediately after contacting a doctor.

Fast treatment of the outer skin and eyes that contact chemicals generally includes immediate and thorough washing of the exposed skin and immediate and continuous flushing of the eyes with lots of clean water for at least 15 minutes or more. These general instructions of first aid treatment may be incorrect for some chemicals; you must know the chemicals and treatment before an accident occurs. Treatment for swallowing a chemical frequently depends upon the nature of the chemical.

Emergency Stop Procedure

In an emergency, follow these steps to stop a system:

1. The ball valve located where the air enters the power head of the resin pump, should be moved to the "OFF" or closed position.

Note ***The "open" or "on" position is when the ball valve handle is parallel (in line) with the ball valve body. The "closed" or "off" position is when the ball valve handle is perpendicular (across) the ball valve body.***

2. Turn all system regulators to the "OFF" position (counter-clockwise) position.
3. Verify / secure the catalyst relief line, located on the catalyst relief valve.
4. Verify / secure the resin return line, located on the resin filter.
5. Place a container under the resin pump ball valve to catch ejected resin.
6. Locate the ball valve on the resin pump.
7. Rotate the ball valve 90 degrees to the "On" or open position.

Grounding

Grounding an object means providing an adequate path for the flow of the electrical charge from the object to the ground. An adequate path is one that permits charge to flow from the object fast enough that it will not accumulate to the extent that a spark can be formed. It is not possible to define exactly what will be an adequate path under all conditions since it depends on many variables. In any event, the grounding means should have the lowest possible electrical resistance.

Grounding straps should be installed on all loose conductive objects in the spraying area. This includes material containers and equipment. Magnum Venus Products recommends grounding straps be made of AWG No.18 stranded wire as a minimum and the larger wire be used where possible. NFPA Bulletin No77 states that the electrical resistance of such a leakage path may be as low as 1 meg ohm (10 ohms) but that resistance as high as 10,000 meg ohms will produce an adequate leakage path in some cases.

CAUTION

Whenever flammable or combustible liquids are transferred from one container to another, or from one container to the equipment, both containers or container and equipment shall be effectively bonded and grounded to dissipate static electricity. For further information, see National Fire Protection Association (NFPA) 77, titled "Recommended Practice on Static Electrical". Refer especially to section 7-7 titled "Spray Application of Flammable and Combustible Materials".

Introduction

This vacuum service module is an air driven unit used to easily check and adjust the switching point of control valves. It also allows for testing for vacuum leaks in injection valves.

This manual provides information for the operation, maintenance, and simple repair of the MVP IVX3 Service Module. The following procedures are included:

- Connection and feature information
- Step-by-step operation instructions

Please read this manual carefully and retain for future reference. Follow the steps in the order given, otherwise you may damage the equipment or injure yourself.

The calibration box's internal vacuum can be adjusted infinitely between atmosphere and minus 800mb.

The unit has the following features:

- Universal insert for vacuum integrity testing
- Adjustable vacuum level
- Vacuum isolation valve
- Pressure indicator
- Three-position selector valve to control outputs to ports
- Air out port
- Internal regulator set at 90 psi (6 bar) for control signals and air out port
- Air leak signal outputs
- Some fittings and tubing supplied attached to the box, so no additional items required

Unit Overview

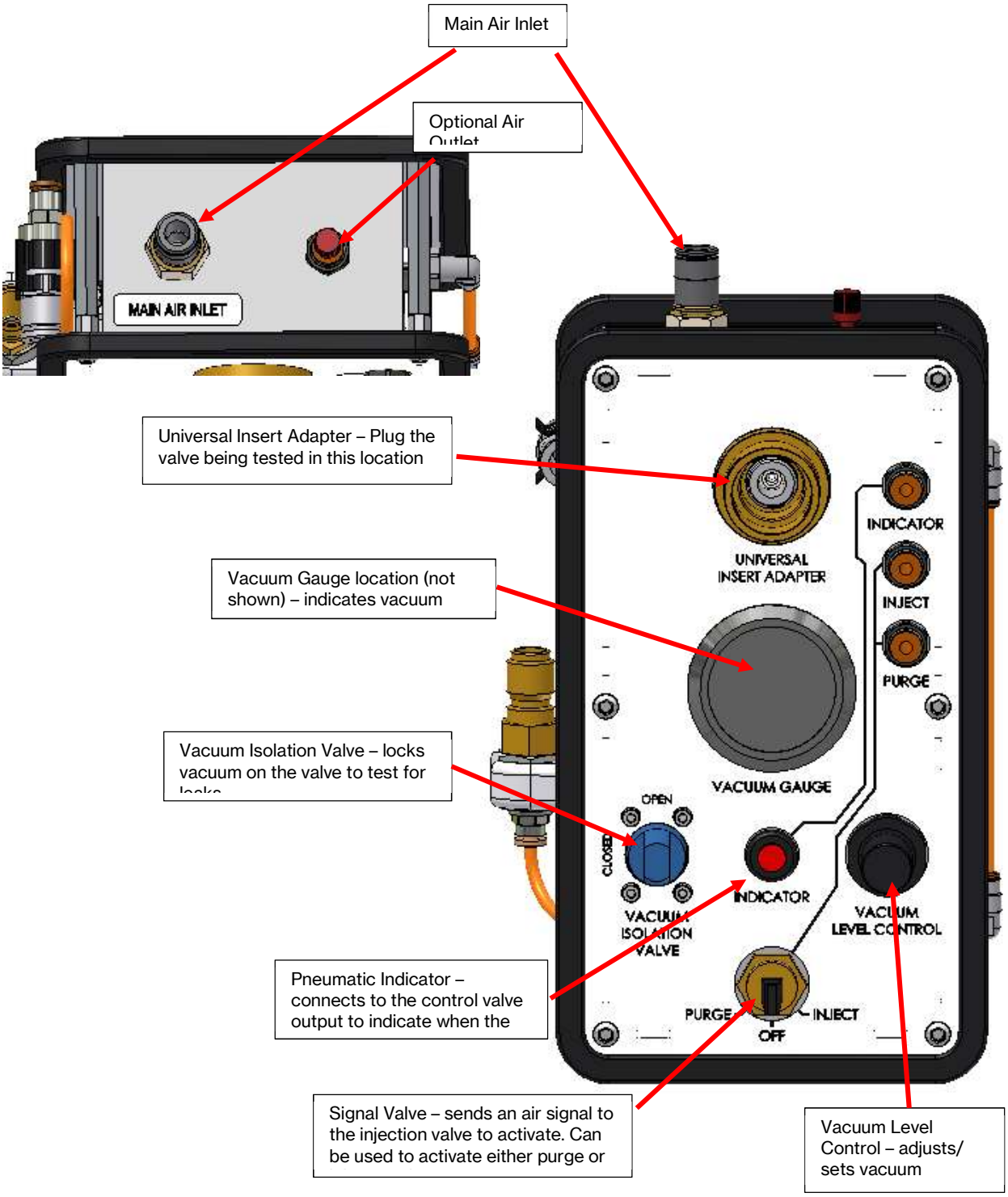

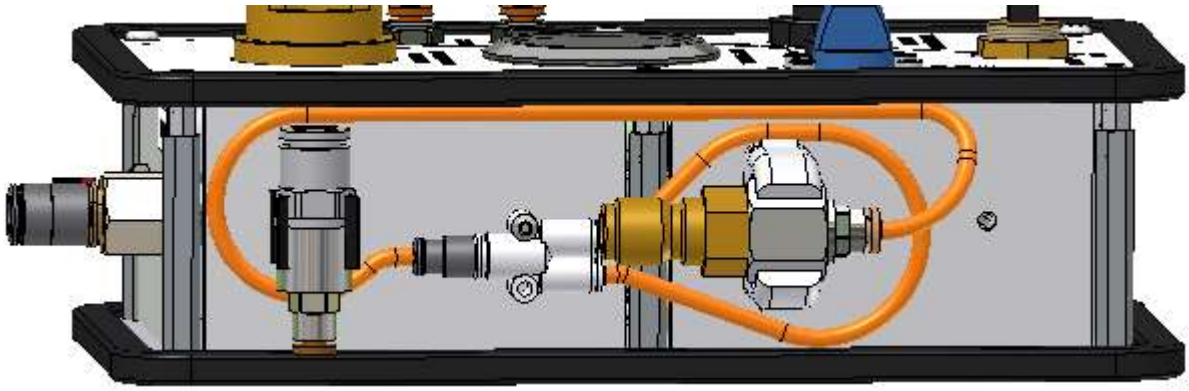

Figure 1. Test Fittings/Tubing

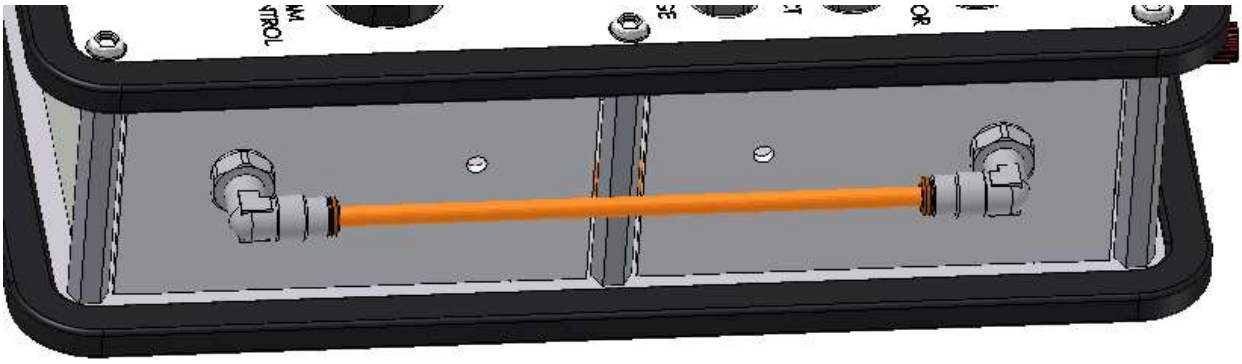

Figure 2. Air Leak Signal

Controls Overview

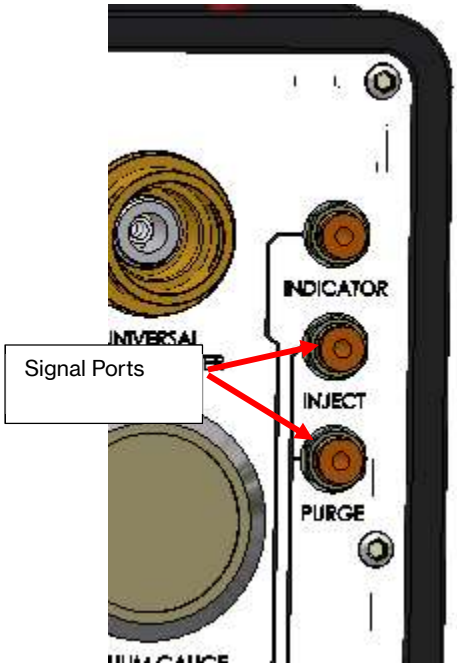

When a signal port is connected to a valve, it switches the valve mode. If the valve is placed in the Off state, no signals are sent. When in purge mode, an air signal is sent to the purge port. When switched to inject mode, and air signal is sent to the inject port.

The Vacuum Level Control is used to adjust the vacuum pressure level. When adjusting the vacuum regulator, the vacuum level is indicated on the Vacuum Gauge.

The Vacuum Isolation Valve locks or insulates the vacuum pressure on the valve in the Universal Insert Adapter port. The **Open** position (vertical) applies the set vacuum on the valve in the Universal Insert Adapter port. The **Closed** position (horizontal) locks the set valve on the valve in the Universal Insert Adapter port.

Internal Overview

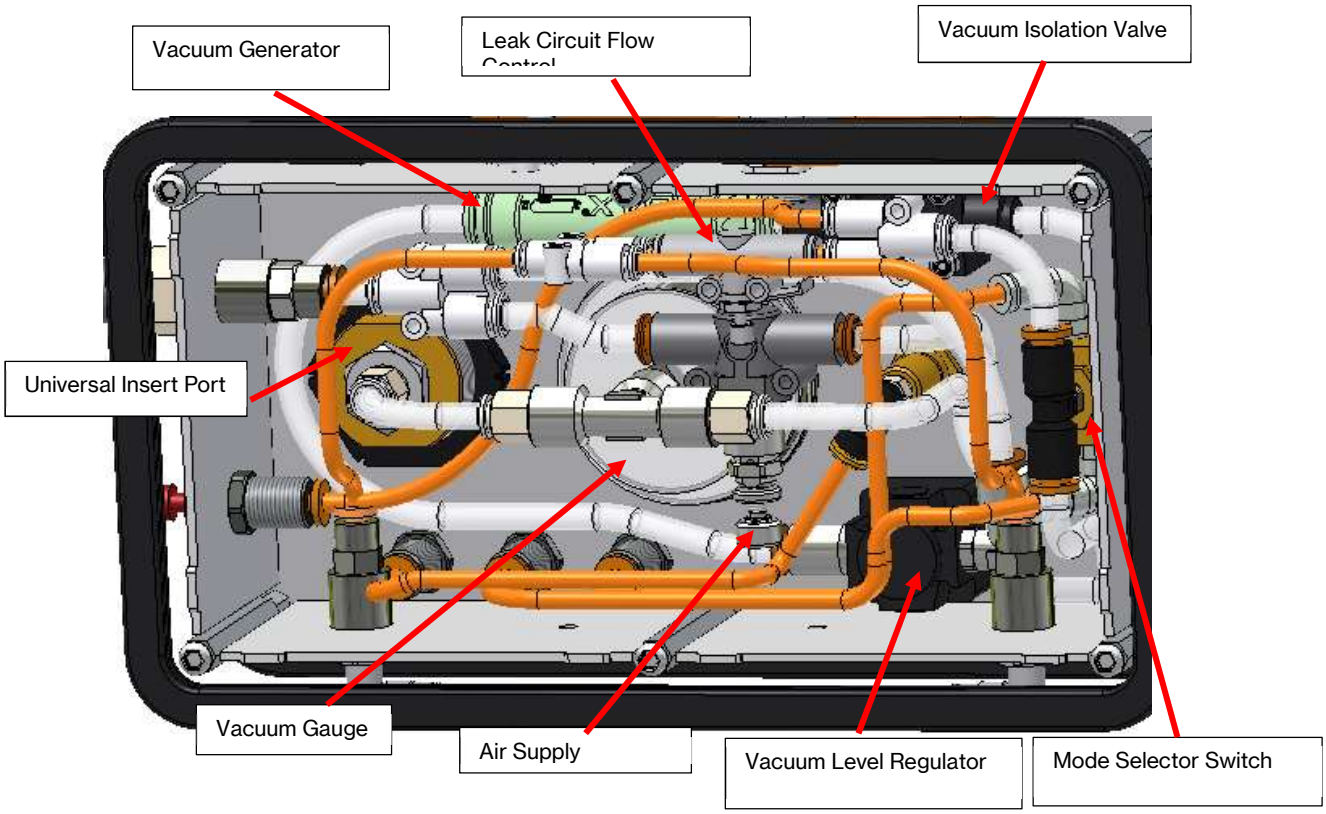

Performing Testing

1. Connect a clean and dry air supply at 90 psi (6 bar) to the main air inlet.

Note ***The control box has an internal regulator set to 90 psi to prevent damage to the valve.***

2. Insert the valve to be tested into the Universal Insert Adapter port.

Testing IVX3 Valve

For Vacuum Leak

3. Connect the corresponding valve ports on the IVX3 to the proper ports on the module using 4 mm tubing.
4. With the IVX3 in off mode, adjust the vacuum control level to maximum.
5. Close the vacuum isolation valve.
6. Wait several minutes to check that the vacuum level on the gauge does not drop.
7. If the vacuum level drops, check the IVX3 seal and repair as needed.

Actuator

8. Connect the purge output on the service module to the purge signal port on the IVX3.
9. Connect the inject output on the service module to the inject signal port on the IVX3.
10. Operate the switch on the service module and put the valve in the inject position.
11. Make sure the actuator shaft assembly moves freely through its full range of travel and that the top of the shaft is visible in the upper slot of the top bush.
12. Move the switch on the service module to the center to exhaust the air from the inject port.
13. Ensure the IVX3 shaft assembly moves freely back to the unactuated position.
14. Operate the switch on the service module and put the valve in the purge position.
15. Ensure the actuator shaft assembly move freely through its full range of travel and the top of the shaft is visible only in the lower slot of the top bush.
16. Move the switch on the service module to the center to exhaust the air from the inject port.
17. Ensure the IVX3 shaft assembly moves freely back to the unactuated position.
18. Repeat steps 10 - 17 several times to ensure correct operation.
19. Put the IVX3 into the purge position and squirt some soapy water around the top bush to check for air leaks.
20. Choose one of these options:

- *If the fluid section of the valve is removed:* Put the IVX3 into the inject position and squirt some soapy water around the bottom bush to check for air leaks.
- *If the fluid section of the valve is attached:* Put the IVX3 into the inject position and squirt some soapy water around the isolation channel to check for air leaks.

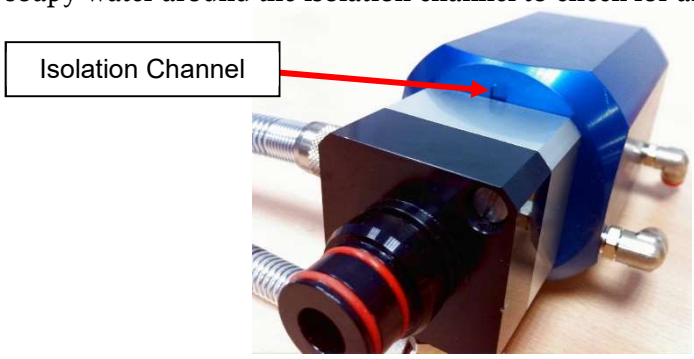

21. If there are any noticeable leaks, check for and remedy the following as needed:

- Bush is tightened and thread locker applied
- O-ring is in good condition
- Bush is in good condition
- Actuator shaft is not damaged (scored, etc.)

Fluid Section Pressure

WARNING

During pressure testing, ensure the IVX3's resin injection port is directed away from yourself and others. Some of the tests will vent air through this port.

22. Place the IVX3 on a bench and ensure the injection port is not connected to anything.
23. Connect the inject output on the service module to the inject signal port on the IVX3.
24. Connect the purge output on the service module to the purge signal port on the IVX3.
25. Ensure the IVX3 is in the closed position.
26. Connect the IVX3 purge outlet to the indicator on the service module.
27. Connect the IVX3 resin inlet to the pressure output on the service module and check the indicator/gauge.

Note ***If pressure registers on the gauge, the valve is leaking between the resin inlet and purge outlet.***

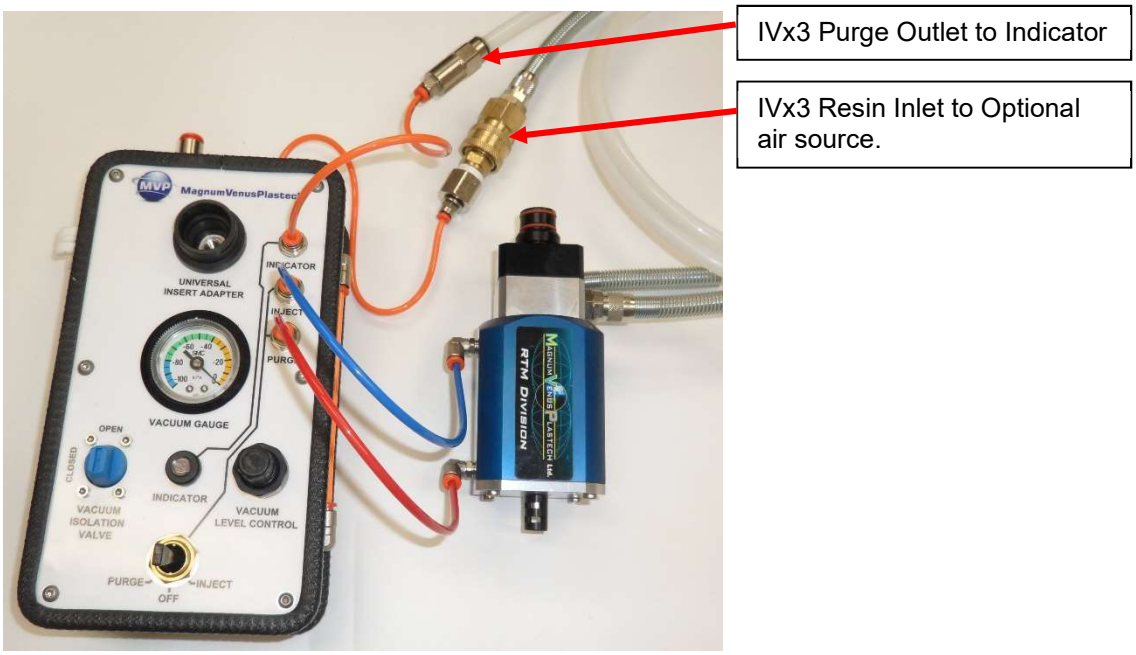

28. Apply soapy water to the seal in the lower valve body and look for bubbling that would indicate a leak – it is acceptable to have a **small** leak here.
29. Operate the IVX3 to the purge position; the indicator should now show pressure.
30. Once again apply soapy water to the seal and check for leaks – there should not be any leaks here if the valve is in good condition.
31. Apply soapy water to the fluid section where the lower valve body and upper valve body join and check for leaks.
32. Apply soapy water to the fluid section where the upper valve body and actuator cylinder join and check for leaks, particularly at the isolation channel.

33. If any leaks are found, inspect the valve bush and fitted O-rings for damage and replace parts as needed.
34. Point the IVX3 away from yourself and others and operate to the inject position until air vents out the resin inject port, then close the valve.
35. Operate the IVX3 between closed/inject/purge/closed positions several times and ensure the shaft is moving freely.

Note ***When testing is complete, residual pressure can remain in the hoses connected to the resin inlet and purge outlet. Take care when disconnecting the valve.***

Testing PPVS-1000

Vacuum Setting for Disconnected Valve

1. Connect the inject output on the control box to the PPVS supply port using 4 mm tubing.
2. Connect the PPVS signal line to the pneumatic indicator on the control box.
3. Using the vacuum level control, adjust the vacuum level up and down to determine the vacuum pressure that he valve activates and deactivates at.

Note ***The indicator will signal red when the valve is active.***

4. To adjust the vacuum pressure at which the valve activates, use the 2.5 mm Allen key to turn the adjustment screw clockwise to switch closer to atmosphere and counterclockwise to switch to higher vacuum pressure.

Vacuum Testing with Unit Connected

Note ***For SSB or Innovator units the 4 mm pipe may be left connected as designed and a 6 mm pipe connected between the leak signal on the PPVS and the machine's mold pressure guard (MPG). The machine can be put on recirculation mode and observed to stop when the PPVS signals at the chose switch point.***

5. Connect the inject output to the PPVS supply port using 4 mm tubing.
6. Use a tee to connect the PPVS leak signal into the MPG signal.
7. Using the vacuum level control, adjust the vacuum pressure up and down; the unit will stop when the PPVS activates the leak port.

Testing Using In-Box Leak Circuit

1. Connect the PPVS supply signal to the inject port on the control box.

2. Connect one of the leak circuit lead signals to the top of the PPVS through the push fitting using a tube and the reducer provided.
3. Connect the other leak signal to the indicator.
4. Adjust the PPVS so that when the indicator is on the machine is running.

Testing for Vacuum Leak

1. Connect the inject output on the control box to the PPVS supply port using 4 mm tubing.
2. Connect the PPVS signal line to the pneumatic indicator on the control box.
3. Using the vacuum level control, adjust the vacuum to the desired level.
4. Turn the vacuum isolator valve to the closed position (horizontal) to lock the vacuum level.
5. If the vacuum moves (leaks) down, replace the seal.

Testing PPVS-Infusion

Adjusting PPVS-Infusion

1. Connect the inject output on the control box to the PPVS supply port using 4 mm tube.
2. Connect the PPVS signal line to the pneumatic indicator on the control box.
3. Using the vacuum level control adjust the vacuum level up and down to determine the vacuum pressure at which the valve activates and deactivates.

Note ***The indicator will signal red when the valve is active.***

4. To adjust the vacuum pressure at which the valve activates, use the 2.5 mm Allen key to turn the adjustment screw clockwise to switch closer to atmosphere or counterclockwise for a higher vacuum pressure.

Testing for Vacuum Leak

1. Connect the inject output on the control box to the PPVS-Infusion supply port using 4 mm tube.
2. Connect the PPVS signal line to the pneumatic indicator on the control box.
3. Use the vacuum level control to adjust the vacuum to the desired level.
4. Turn the vacuum isolator valve to the closed position (horizontal) to lock the vacuum level.
5. If the vacuum moves (leaks) down, replace the seal.

Testing Turbo Auto Sprue (TAS)

Testing TAS for Vacuum Leak

1. Connect the inject output on the control box to the TAS supply port using 4 mm tube.
2. Operate the switch on the service module and put the valve in the inject position.
3. Ensure the actuator shaft assembly moves freely through its full range of travel and that the top of the shaft is visible.
4. Put the switch on the service module in the closed position.
5. Open the isolation valve on the service module and then adjust the vacuum level at the universal insert to the maximum level (80% + vacuum).
6. If it does not reach the maximum level, do the following as needed:

- Check the test equipment by plugging the universal insert and ensuring a high vacuum can be reached.
- Check the two O-rings are in good condition and replace as needed.
- If neither is the problem, the valve seal is leaking an unacceptable amount and the valve fluid section should be serviced.

7. Once a suitable vacuum level is reached, close the isolation valve on the service module to isolate the vacuum source.
8. Adjust the vacuum level to zero/off.

Note ***Ideally the level on the vacuum gauge should remain stationary and the vacuum should be maintained.***

9. Open the vacuum isolation valve to remove the vacuum.

Note ***It is important that the valve does not leak during production. If so, air could be drawn into the part during the curing cycle.***

Pressure Testing TAS

1. Use fittings to block the flush/purge line.
2. Connect the resin inlet to the pressure output on the service module.
3. Connect inject signal from the selector to the TAS signal.
4. When the valve is closed, use soapy water around the nose/body to check for leaks.
5. Point the nose away from yourself and other and then open and close the valve several times to make sure the actuator is exhausting air.
6. Repeat the leak test and cycling a number of times to ensure the valve is okay.

Parts Drawings

The following parts drawings are included for reference:

- 83005_01 Pneumatic Diagram – 8018
- 8018 IVX3 Service Module

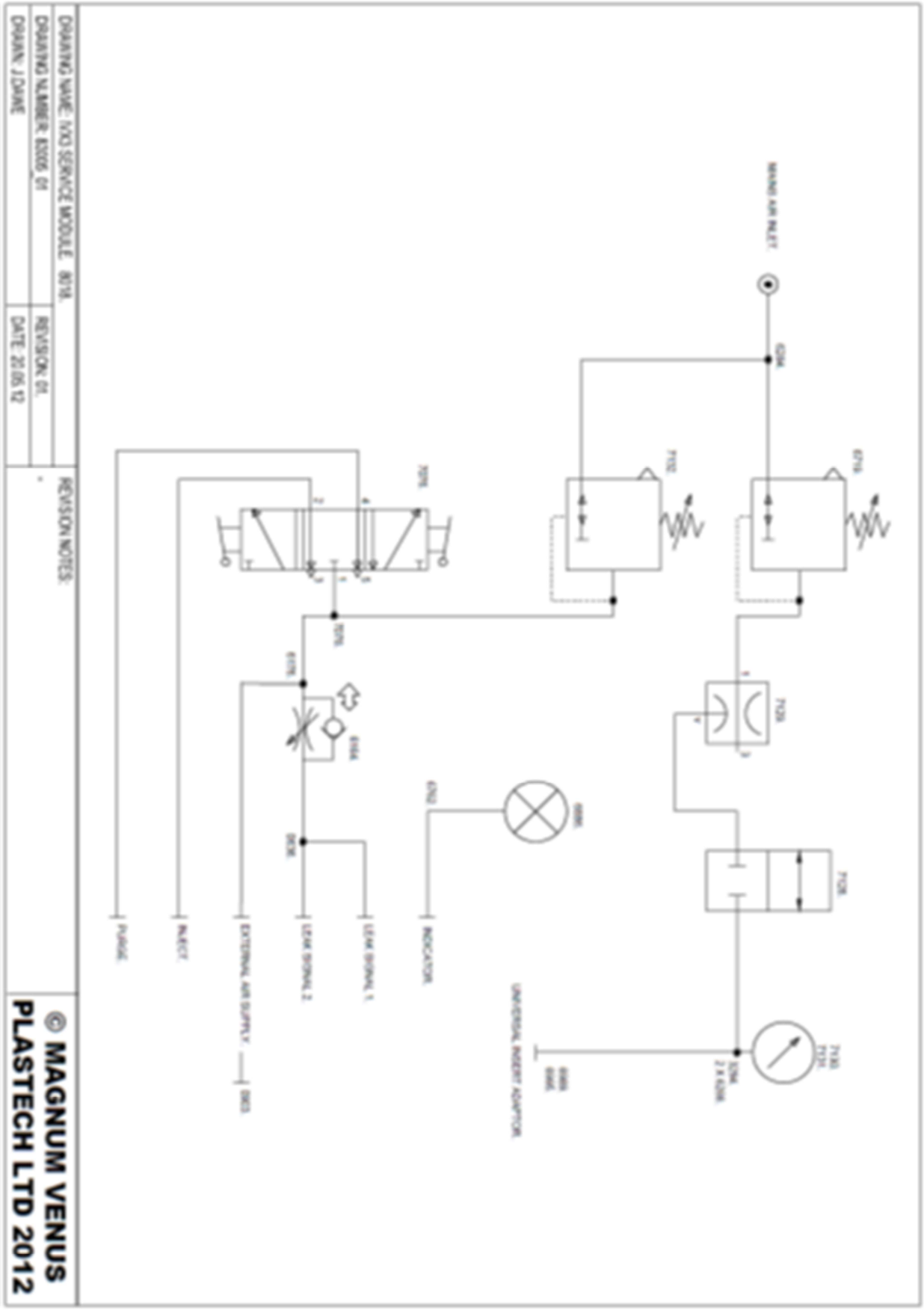
DRAWING NAME: IVX3 SERVICE MODULE 80/18
DRAWING NUMBER: B3005 01
DRAWN: J DAVIE
REVISION: 01
DATE: 20.06.12
REVISION NOTES:
MAGNUM VENUS
PLASTECH LTD 2012
MAIN AIR INLET
UNIVERSAL INSERT ADAPTOR
INDICATOR
LEAK SIGNAL 1
LEAK SIGNAL 2
EXTERNAL AIR SUPPLY
INJECT
PURGE

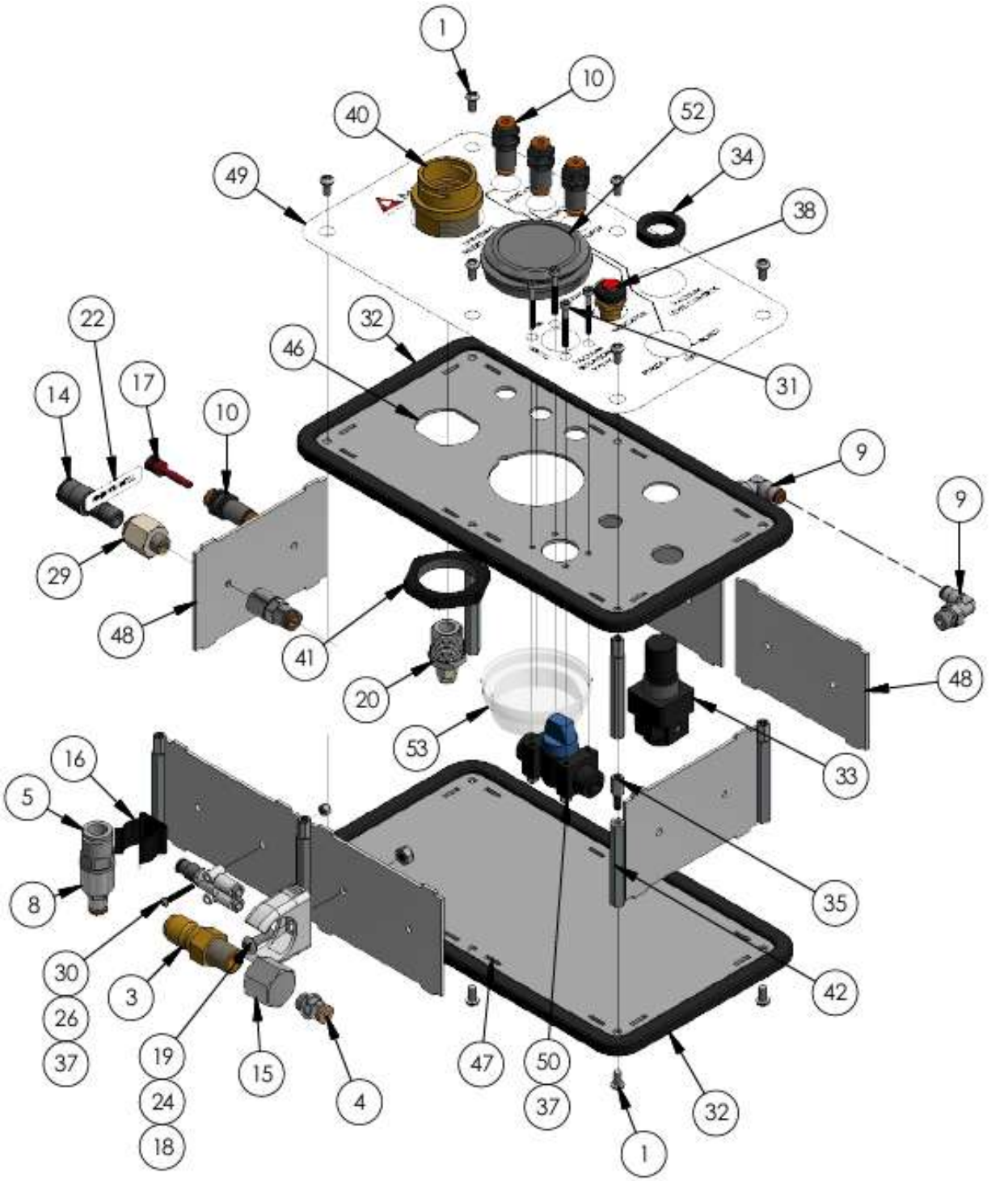

MAGNUM VENUS PRODUCTS

IVX3 PPVS SET UP BOX	8018

REV: B 10/03/2018 SHEET 1 / 7 8/16/2016

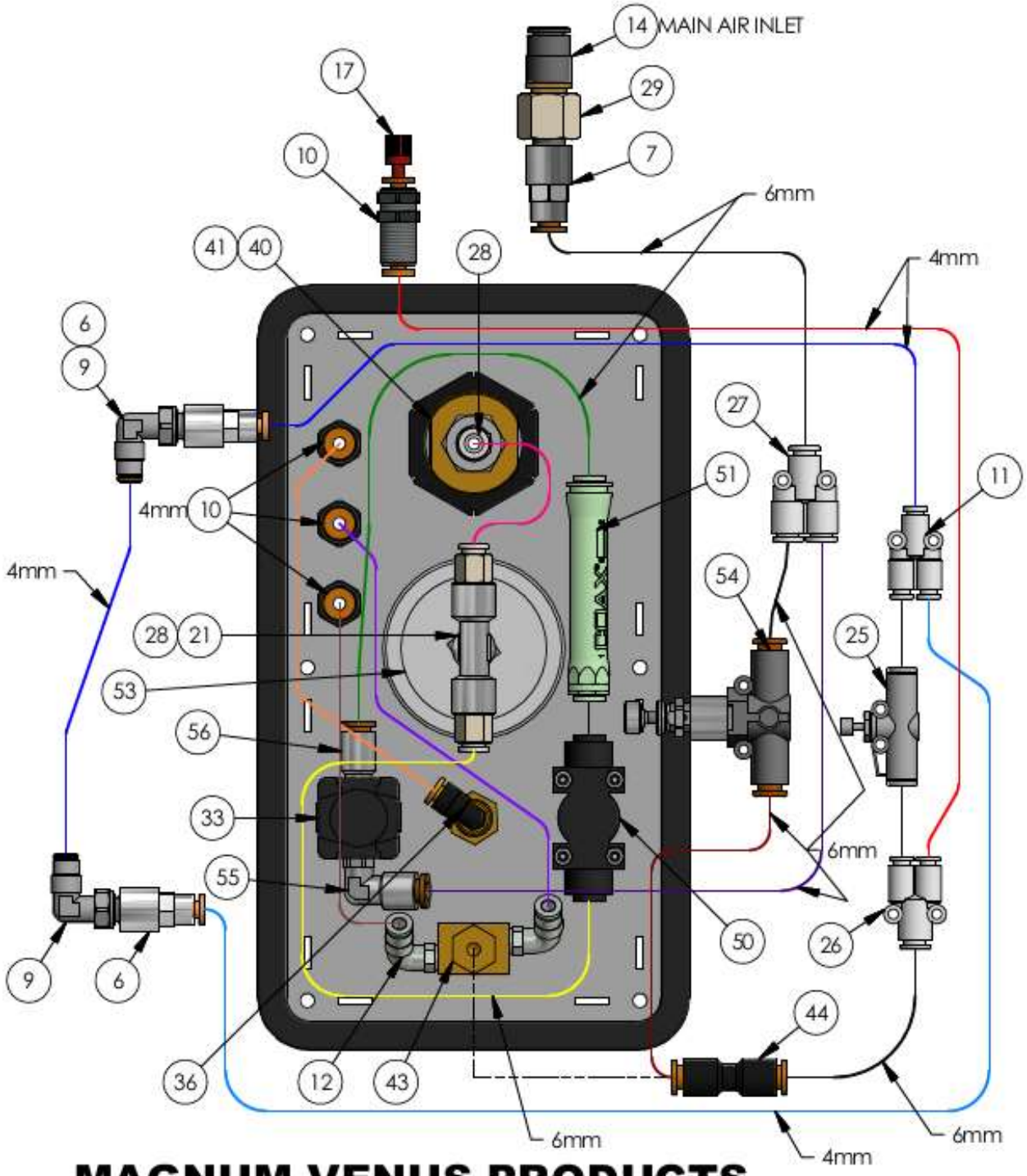

MAGNUM VENUS PRODUCTS

IVX3 PPVS SET UP BOX	8018

REV: B 10/03/2018 SHEET 2 / 7 8/16/2016

PLUMBING IDENTIFIERS			
LABEL	CONNECTIONS	TUBE SIZE (mm)	CONNECTION DESCRIPTION
A	9-11	4	AIR LEAK SIGNAL
B	9-11	4	AIR LEAK SIGNAL
C	10-36	4	INDICATOR - INDICATOR
D	10-12	4	INJECT - MODE SELECTOR SWITCH
E	10-12	4	PURGE - MODE SELECTOR SWITCH
F	10-26	4	LEAK CIRCUIT
G	27-54	6	MAIN AIR INLET - AIR SUPPLY REGULATOR
H	27-55	6	MAIN AIR INLET - REGULATOR
J	56-51	6	REGULATOR - VACUUM GENERATOR
K	44-54	6	MODE SELECTOR - AIR SUPPLY REGULATOR
L	44-26	6	LEAK CIRCUIT
M	4-13	4	TEST FITTINGS/TUBING
N	28-50	6	VACUUM ISOLATION VALVE - GAUGE
P	50-51	6	**VACUUM ISOLATION VALVE - VACUUM GENERATOR
R	7-27	6	**
S	25-26	4	**
T	20-28	6	UNIVERSAL INSERT - GAUGE
U	11-25	4	**

** INDICATES SHORT TUBE CONNECTION

MAGNUM VENUS PRODUCTS

IVX3 PPVS SET UP BOX	8018

REV: B 10/03/2018 SHEET 4 / 7 8/16/2016

CORPORATE HEADQUARTERS
2030 Falling Waters Rd, Suite 350, Knoxville, TN 37922 · USA · Tel: (865) 686-5670

DISTRIBUTION AND PURCHASING
642 Barbrow Ln, Knoxville, TN 37932 · USA · Tel: (865) 684-4416

TECHNOLOGY CENTER AND MANUFACTURING
1862 Ives Ave, Kent, WA 98032 · USA · Tel (253) 854-2660 · Fax (253) 854-1666

E-mail: info@mvpind.com

For a list of international distributors, visit our website at :

www.mvpind.com/mvp-international