Ultrabond Adhesive Systems

Operations Manual

This manual is applicable to the following models:

- IMA-CCP-ADH-HOD
- IMA-CCP-ADH-PRO
- IMA-CCP-ADH-LF-PRO

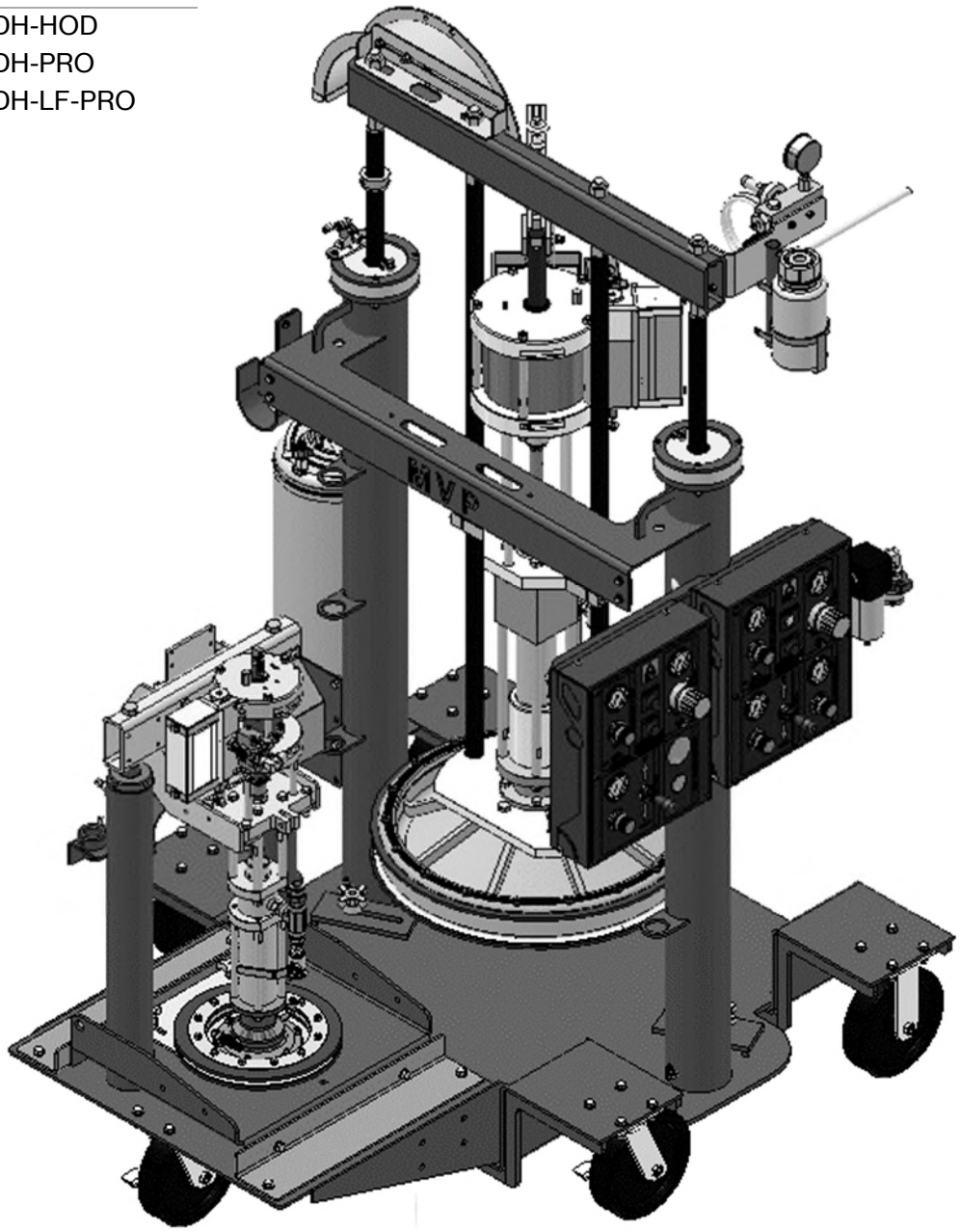

MAGNUM VENUS PRODUCTS

Rev. December 2019

CORPORATE HEADQUARTERS
2030 Falling Waters Rd, Suite 350, Knoxville, TN 37922 · USA · Tel: (865) 686-5670

DISTRIBUTION AND PURCHASING
642 Barbrow Ln, Knoxville, TN 37932 · USA · Tel: (865) 684-4416

TECHNOLOGY CENTER AND MANUFACTURING
1862 Ives Ave, Kent, WA 98032 · USA · Tel (253) 854-2660 · Fax (253) 854-1666

E-mail: info@mvpind.com

For a list of international distributors, visit our website at :
www.mvpind.com/mvp-international

Use of this product confirms that Magnum Venus Products, Inc.'s standard terms and conditions of sale apply.

Table of Contents

Section	Page
• Table of Contents	3
• Safety & Warning Information	4
• Introduction	15
• Getting Started	18
• Priming the Unit	19
• Mixing and Dispensing	21
• Flushing and Shutting Down	22
• Changing an Empty Drum	23

Safety & Warning Information

Warnings

Due to the vast number of chemicals that could be used and their varying chemical reactions, the buyer and user of this equipment should determine all factors relating to the fluids used, including any of the potential hazards involved. Particular inquiry and investigation should be made into potential dangers relating to toxic fumes, fires, explosions, reaction times, and exposure of human beings to the individual components or their resultant mixtures. MVP assumes no responsibility for loss, damage, expense or claims for bodily injury or property damage, direct or consequential, arising from the use of such chemical components.

The end user is responsible for ensuring that the end product or system complies with all the relevant laws in the country where it is to be used and that all documentation is adhered to.

Recommended Occupational Safety & Health Act (OSHA) Documentation:

- 1910.94 Pertaining to ventilation
- 1910.106 Pertaining to flammable liquids
- 1910.107 Pertaining to spray finishing operations, particularly paragraph (m), Organic Peroxides and Dual Component Coatings

For Additional information, contact the Occupational Safety and Health Administration (OSHA) at https://www.osha.gov/about.html.

Recommended National Fire Protection Association (NFPA) Documentation:

- NFPA No.33 Chapter 14 Organic Peroxides and Dual Component Materials
- NFPA No. 63 Dust Explosion Prevention
- NFPA No. 70 National Electrical Code
- NFPA No. 77 Static Electricity
- NFPA No. 91 Blower and Exhaust System
- NFPA No. 654 Plastics Industry Dust Hazards

Fire Extinguisher – code ABC, rating number 4a60bc using Extinguishing Media –Foam, Carbon Dioxide, Dry Chemical, Water Fog, is recommended for this product and applications.

The following general warnings and guidelines are for the setup, use, grounding, maintenance, and repair of equipment. Additional product-specific warnings may be found throughout this manual as applicable. Please contact your nearest MVP Technical Service Representative if additional information is needed.

Safety Precautions
• Avoid skin contact and inhalation of all chemicals.
• Review Material Safety Data Sheet (MSDS) to promote the safe handling of chemicals in use.
• Restrict the use of all chemicals to designated areas with good ventilation.
• Chemicals are flammable and reactive.
• Noxious fumes released when combusted.
• Operate equipment in a ventilated environment only.
• Uncured liquid resins are highly flammable unless specifically labeled otherwise.
• Cured laminate, accumulations of overspray, and laminate sandings are highly combustible.
• Do not operate or move electrical equipment when flammable fumes are present.
• Ground all equipment.
• If a spark is seen or felt, immediately halt operation. Do not operate the equipment until the issue has been identified and repaired.
• Contaminated catalyst may cause fire or explosion.
• Containers may explode if exposed to fire / heat.
• Use and store chemicals away from heat, flames, and sparks.
• Do not smoke in work areas or near stored chemicals.
• Do not mix Methyl Ethyl Ketone Peroxide (MEKP) with materials other than polyethylene.
• Do not dilute MEKP.
• Keep food and drink away from work area.

Physical Hazards
• Never look directly into the spray gun fluid tip. Serious injury or death can result.
• Never aim the spray gun at or near another person. Serious injury or death can result.
• Chemical compounds can be severely irritating to the eyes and skin.
• Inhalation, ingestion, or injection may damage internal organs and lead to pulmonary disorders, cancers, lymphomas, and other diseases or health conditions.
• Other potential health effects include: irritation of the eyes and upper respiratory tract, headache, light-headedness, dizziness, confusion, drowsiness, nausea, vomiting, and occasionally abdominal pain.
• Eye contact: Immediately flush with water for at least 15 minutes and seek immediate medical attention.
• Skin Contact: Immediately wash with soap and water and seek immediate medical attention.
• Inhalation: Move the person to fresh air and seek immediate medical attention.
• Do not remove shields, covers, or safety features on equipment that is in use.
• Never place fingers, hands, or any body part near or directly in front of the spray gun fluid tip. The force of the liquid as it exits the spray tip can shoot liquid through the skin.
• Keep hands and body parts away from any moving equipment or components.
• Do not stand under plunger
• An improperly loaded drum may lead to an imbalance, causing a unit to tip over

Personal Protective Equipment (PPE)
• MVP recommends the use of personal safety equipment with all products in our catalog.
• Wear safety goggles, hearing protection, a respirator, and chemical resistant gloves.
• Wear long sleeve shirts or jackets and pants to minimize skin exposure.
• PPE should be worn by operators and service technicians to reduce the risk of injury.

For Additional information, contact the Occupational Safety and Health Administration (OSHA). https://www.osha.gov/about.html

Symbol Definitions

Indicates the risk of contact with chemicals that are hazardous, which may lead to injury or death.

Indicates the risk of contact with voltage / amperage that may lead to serious injury or death

Indicates that the materials being used are susceptible to combustion

Indicates the risk of contact with moving components that may lead to serious injury or death.

Indicates that the system or component should be grounded before proceeding with use or repair.

Indicates the use of lit cigarettes or cigars is prohibited, because the materials being used are susceptible to combustion.

Indicates that the materials and/or the process being performed can lead to ignition and explosion.

A recommendation for the use of Personal Protective Equipment (PPE) before using or repairing the product.

Polymer Matrix Materials: Advanced Composites

Potential health hazards associated with the use of advanced composites can be controlled through the implementation of an effective industrial hygiene and safety program.

https://www.osha.gov/dts/osta/otm/otm_iii/otm_iii_1.html#t iii:1_1

Resins		
Composite Component	**Organ System Target (Possible Target)**	**Known (Possible) Health Effect**
Epoxy resins	Skin, lungs, eyes	Contact and allergic dermatitis, conjunctivitis
Polyurethane resins	Lungs, skin, eyes	Respiratory sensitization, contact dermatitis, conjunctivitis
Phenol formaldehyde	Skin, lungs, eyes	As above (potential carcinogen)
Bismaleimides (BMI)	Skin, lungs, eyes	As above (potential carcinogen)
Polyamides	Skin, lungs, eyes	As above (potential carcinogen)
Reinforcing materials		
Composite Component	**Organ System Target (Possible Target)**	**Known (Possible) Health Effect**
Aramid fibers	Skin (lungs)	Skin and respiratory irritation, contact dermatitis (chronic interstitial lung disease)
Carbon/graphite fibers	Skin (lungs)	As noted for aramid fibers
Glass fibers (continuous filament)	Skin (lungs)	As noted for aramid fibers
Hardeners and curing agents		
Composite Component	**Organ System Target (Possible Target)**	**Known (Possible) Health Effect**
Diaminodiphenylsulfone	N/A	No known effects with workplace exposure
Methylenedianiline	Liver, skin	Hepatotoxicity, suspect human carcinogen
Other aromatic amines		
Composite Component	**Organ System Target (Possible Target)**	**Known (Possible) Health Effect**
Meta-phenylenediamine (MPDA)	Liver, skin (kidney, bladder)	Hepatitis, contact dermatitis (kidney and bladder cancer)
Aliphatic andcyclo-aliphatic amines	Eyes, skin	Severe irritation, contact dermatitis
Polyaminoamide	Eyes, skin	Irritation (sensitization)
Anhydride	Eyes, lungs, skin	Severe eye and skin irritation, respiratory sensitization, contact dermatitis

Catalyst - Methyl Ethyl Ketone Peroxide (MEKP)

MEKP is among the more hazardous materials found in commercial channels. The safe handling of the "unstable (reactive)" chemicals presents a definite challenge to the plastics industry. The highly reactive property which makes MEKP valuable to the plastics industry in producing the curing reaction of polyester resins also produces the hazards which require great care and caution in its storage, transportation, handling, processing and disposal. MEKP is a single chemical. Various polymeric forms may exist which are more or less hazardous with respect to each other. These differences may arise not only from different molecular structures (all are, nevertheless, called "MEKP") and from possible trace impurities left from the manufacture of the chemicals, but may also arise by contamination of MEKP with other materials in its storage or use. Even a small amount of contamination with acetone, for instance, may produce an extremely shock-sensitive and explosive compound.

WARNING

Contamination with promoters, materials containing promoters (such as laminate sandings), or with any readily oxidizing material (such as brass or iron) will cause exothermic redox reactions which can be explosive in nature. Heat applied to MEKP or heat buildup from contamination reactions can cause the material to reach its Self-Accelerating Decomposition Temperature (SADT).

Researchers have reported measuring pressure rates-of-rise well over 100,000 psi per second when certain MEKP's reach their SADT. For comparison, the highest-pressure rate-of-rise listed in NFPA Bulletin NO.68, "Explosion Venting", is 12,000 psi per second for an explosion of 12% acetylene and air. The maximum value listed for a hydrogen explosion is 10,000 psi per second. Some forms of MEKP, if allowed to reach their SADT, will burst even an open topped container. This suggests that it is not possible to design a relief valve to vent this order of magnitude of pressure rate-of-rise. The user should be aware that any closed container, be it a pressure vessel, surge chamber, or pressure accumulator, could explode under certain conditions. There is no engineering substitute for care by the user in handling organic peroxide catalysts. If, at any time, the pressure relieve valve on top of the catalyst tank should vent, the area should be evacuated at once and the fire department called. The venting could be the first indication of a heat, and therefore, pressure build-up that could eventually lead to an explosion. Moreover, if a catalyst tank is sufficiently full when the pressure relief valve vents, some catalyst may spray out, which could cause eye injury. For this reason, and many others, anyone whose job puts them in an area where this vented spray might go, should always wear full eye protection even when laminating operations are not taking place.

Safety in handling MEKP depends to a great extent on employee education, proper safety instructions, and safe use of the chemicals and equipment. Workers should be thoroughly informed of the hazards that may result from improper handling of MEKP, especially regarding contamination, heat, friction and impact. They should be thoroughly instructed regarding the proper action to be taken in the storage, use, and disposal of MEKP and other hazardous materials used in the laminating operation. In addition, users should make every effort to:

- Store MEKP in a cool, dry place in original containers away from direct sunlight and away from other chemicals.
- Keep MEKP away from heat, sparks, and open flames.
- Prevent contamination or MEKP with other materials, including polyester over spray and sandings, polymerization accelerators and promoters, brass, aluminum, and non-stainless steels.
- Never add MEKP to anything that is hot, since explosive decomposition may result.

- Avoid contact with skin, eyes, and clothing. Protective equipment should be worn at all times. During clean-up of spilled MEKP, personal safety equipment, gloves, and eye protection must be worn. Firefighting equipment should be at hand and ready.
- Avoid spillage, which can heat up to the point of self-ignition.
- Repair any leaks discovered in the catalyst system immediately, and clean-up the leaked catalyst at once in accordance with the catalyst manufacturer's instructions.
- Use only original equipment or equivalent parts from Magnum Venus Products in the catalyst system (i.e.: hoses, fitting, etc.) because a dangerous chemical reaction may result between substituted parts and MEKP.
- Catalyst accumulated from the purging of hoses or the measurement of fluid output deliveries should never be returned to the supply tank, such catalyst should be diluted with copious quantities of clean water and disposed of in accordance with the catalyst manufacturer's instructions.

The extent to which the user is successful in accomplishing these ends and any additional recommendations by the catalyst manufacturer determines largely the safety that will be present in his operation.

Clean-Up Solvents and Resin Diluents

WARNING

A hazardous situation may be present in your pressurized fluid system! Hydro carbon solvents can cause an explosion when used with aluminum or galvanized components in a closed (pressurized) fluid system (pump, heaters, filters, valves, spray guns, tanks, etc.). An explosion could cause serious injury, death, and/or substantial property damage. Cleaning agents, coatings, paints, etc. may contain Halogenated Hyrdrocarbon solvents. Some Magnum Venus Products spray equipment includes aluminum or galvanized components and will be affected by Halogenated Hydrocarbon solvents.

There are three key elements to the Halogenated Hyrdocarbon (HHC) solvent hazard.

1.	The presence of HHC solvents.	1,1,1 – Trichloroethane and Methylene Chloride are the most common of these solvents. However, other HHC solvents are suspect if used; either as part of paint or adhesives formulation, or for clean-up flushing.
2.	Aluminum or Galvanized Parts.	Most handling equipment contains these elements. In contact with these metals, HHC solvents could generate a corrosive reaction of a catalytic nature.
3.	Equipment capable of withstanding pressure.	When HHC solvent contact aluminum or galvanized parts inside a closed container such as a pump, spray gun, or fluid handling system, the chemical reaction can, over time, result in a build-up of heat and pressure, which can reach explosive proportions. When all three elements are present, the result can be an extremely violent explosion. The reaction can be sustained with very little aluminum or galvanized metal; any amount of aluminum is too much.

- The reaction is unpredictable. Prior use of an HHC solvent without incident (corrosion or explosion) does NOT mean that such use is safe. These solvents can be dangerous alone (as a clean-up or flushing agent) or when used as a component or a coating material. There is no

known inhibitor that is effective under all circumstances. Mixing HHC solvents with other materials or solvents such as MEKP, alcohol, or toluene may render the inhibitors ineffective.

- The use of reclaimed solvents is particularly hazardous. Reclaimers may not add any inhibitors. The possible presence of water in reclaimed solvents could also feed the reaction.
- Anodized or other oxide coatings cannot be relied upon to prevent the explosive reaction. Such coatings can be worn, cracked, scratched, or too thin to prevent contact. There is no known way to make oxide coatings or to employ aluminum alloys to safely prevent the chemical reaction under all circumstances.
- Several solvent suppliers have recently begun promoting HHC solvents for use in coating systems. The increasing use of HHC solvents is increasing the risk. Because of their exemption from many state implementation plans as Volatile Organic Compounds (VOCs), their low flammability hazard, and their not being classified as toxic or carcinogenic substances, HHC solvents are very desirable in many respects.

WARNING

Do not use Halogenated Hydrocarbon (HHC) solvents in pressurized fluid systems having aluminum or galvanized wetted parts.
Magnum Venus Products is aware of NO stabilizers available to prevent HHC solvents from reaction under all conditions with aluminum components in closed fluid systems. HHC solvents are dangerous when used with aluminum components in a closed fluid system.

- Consult your material supplier to determine whether your solvent or coating contains Halogenated Hydrocarbon solvents.
- Magnum Venus Products recommends that you contact your solvent supplier regarding the best non-flammable clean-up solvent with the heat toxicity for your application.
- If, however, you find it necessary to use flammable solvents, they must be kept in approved, electrically grounded containers.
- Bulk solvent should be stored in a well-ventilated, separate building, 50 feet away from your main plant.
- You should only allow enough solvent for one day's use in your laminating area.
- NO SMOKING signs must be posted and observed in all areas of storage or where solvents and other flammable materials are used.
- Adequate ventilation (as covered in OSHA Section 1910.94 and NFPA No.91) is important wherever solvents are stored or used, to minimize, confine and exhaust the solvent vapors.
- Solvents should be handled in accordance with OSHA Section 1910.106 and 1910.107.

Catalyst Diluents

Magnum Venus Products spray-up and gel-coat systems currently produced are designed so that catalyst diluents are not required. Magnum Venus Products therefore recommends that diluents not be used to avoid possible contamination which could lead to an explosion due to the handling and mixing of MEKP and diluents. In addition, it eliminates any problems from the diluent being contaminated through rust particles in drums, poor quality control on the part of the diluents suppliers, or any other reason. If diluents are absolutely required, contact your catalyst supplier and follow his instructions explicitly. Preferably the supplier should premix the catalyst to prevent possible "on the job" contamination while mixing.

WARNING

If diluents are not used, remember that catalyst spillage and gun, hose, and packing leaks are potentially more hazardous since each drop contains a higher concentration of catalyst and will therefore react more quickly with overspray and the leak.

Cured Laminate, Overspray and Laminate Sandings Accumulation

- Remove all accumulations of overspray, Fiberglass Reinforced Plastic (FRP) sandings, etc. from the building as they occur. If this waste is allowed to build up, spillage of catalyst is more likely to start a fire; in addition, the fire would burn hotter and longer.
- Floor coverings, if used, should be non-combustible.
- Spilled or leaked catalyst may cause a fire if it comes in contact with an FRP product, over-sprayed chop or resin, FRP sandings or any other material with MEKP.

To prevent spillage and leakage, you should:

1.	Maintain your Magnum Venus Products System.	Check the gun several times daily for catalyst and resin packing or valve leaks. REPAIR ALL LEAKS IMMEDIATELY.
2.	Never leave the gun hanging over or lying inside the mold.	A catalyst leak in this situation would certainly damage the part, possibly the mold, and may cause a fire.
3.	Inspect resin and catalyst hoses daily for wear or stress at the entry and exits of the boom sections and at the hose and fittings.	Replace if wear or weakness is evident or suspected.
4.	Arrange the hoses and fiberglass roving guides so that the fiberglass strands DO NOT rub against any of the hoses at any point.	If allowed to rub, the hose will be cut through, causing a hazardous leakage of material which could increase the danger of fire. Also, the material may spew onto personnel in the area.

Toxicity of Chemicals

- Magnum Venus Products recommends that you consult OSHA Sections 1910.94, 1910.106, 1910.107 and NFPA No.33, Chapter 14, and NFPA No.91.
- Contact your chemical supplier(s) and determine the toxicity of the various chemicals used as well as the best methods to prevent injury, irritation and danger to personnel.
- Also determine the best methods of first aid treatment for each chemical used in your plant.

Equipment Safety

Magnum Venus Products suggest that personal safety equipment such as EYE GOGGLES, GLOVES, EAR PROTECTION, and RESPIRATORS be worn when servicing or operating this equipment. Ear protection should be worn when operating a fiberglass chopper to protect against hearing loss since noise levels can be as high as 116 dB (decibels). This equipment should only be operated or serviced by technically trained personnel!

CAUTION

Never place fingers, hands, or any body part near or directly in front of the spray gun fluid tip. The force of the liquid as it exits the spray tip can cause serious injury by shooting liquid through the skin. NEVER LOOK DIRECTLY INTO THE GUN SPRAY TIP OR POINT THE GUN AT OR NEAR ANOTHER PERSON OR AN ANIMAL.

DANGER

Contaminated catalyst may cause fire or explosion. Before working on the catalyst pump or catalyst accumulator, wash hands and tools thoroughly. Be sure work area is free from dirt, grease, or resin. Clean catalyst system components with clean water daily.

DANGER

Eye, skin, and respiration hazard. The catalyst MEKP may cause blindness, skin irritation, or breathing difficulty. Keep hands away from face. Keep food and drink away from work area.

Treatment of Chemical Injuries

CAUTION

Refer to your catalyst manufacturer's safety information regarding the safe handling and storage of catalyst. Wear appropriate safety equipment as recommended.

Great care should be used in handling the chemicals (resins, catalyst and solvents) used in polyester systems. Such chemicals should be treated as if they hurt your skin and eyes and as if they are poison to your body. For this reason, Magnum Venus Products recommends the use of protective clothing and eye wear in using polyester systems. However, users should be prepared in the event of such an injury.

Precautions include:

1. Know precisely what chemicals you are using and obtain information from your chemical supplier on what to do in the event the chemical gets onto your skin or into the eyes, or if swallowed.
2. Keep this information together and easily available so that it may be used by those administering first aid or treating the injured person.
3. Be sure the information from your chemical supplier includes instructions on how to treat any toxic effects the chemicals have.

WARNING

Contact your doctor immediately in the event of an injury. If the product's MSDS includes first aid instructions, administer first aid immediately after contacting a doctor.

Fast treatment of the outer skin and eyes that contact chemicals generally includes immediate and thorough washing of the exposed skin and immediate and continuous flushing of the eyes with lots of clean water for at least 15 minutes or more. These general instructions of first aid treatment may be incorrect for some chemicals; you must know the chemicals and treatment before an accident occurs. Treatment for swallowing a chemical frequently depends upon the nature of the chemical.

Emergency Stop Procedure

In an emergency, follow these steps to stop a system:

1. The ball valve located where the air enters the power head of the resin pump, should be moved to the "OFF" or closed position.

Note ***The "open" or "on" position is when the ball valve handle is parallel (in line) with the ball valve body. The "closed" or "off" position is when the ball valve handle is perpendicular (across) the ball valve body.***

2. Turn all system regulators to the "OFF" position (counter-clockwise) position.
3. Verify / secure the catalyst relief line, located on the catalyst relief valve.
4. Verify / secure the resin return line, located on the resin filter.
5. Place a container under the resin pump ball valve to catch ejected resin.
6. Locate the ball valve on the resin pump.
7. Rotate the ball valve 90 degrees to the "On" or open position.

Grounding

Grounding an object means providing an adequate path for the flow of the electrical charge from the object to the ground. An adequate path is one that permits charge to flow from the object fast enough that it will not accumulate to the extent that a spark can be formed. It is not possible to define exactly what will be an adequate path under all conditions since it depends on many variables. In any event, the grounding means should have the lowest possible electrical resistance.

Grounding straps should be installed on all loose conductive objects in the spraying area. This includes material containers and equipment. Magnum Venus Products recommends grounding straps be made of AWG No.18 stranded wire as a minimum and the larger wire be used where possible. NFPA Bulletin No77 states that the electrical resistance of such a leakage path should be 1 meg ohm (10^6 ohms) or less.

CAUTION

Whenever flammable or combustible liquids are transferred from one container to another, or from one container to the equipment, both containers or container and equipment shall be effectively bonded and grounded to dissipate static electricity. For further information, see National Fire Protection Association (NFPA) 77, titled "Recommended Practice on Static Electrical". Refer especially to section 7-7 titled "Spray Application of Flammable and Combustible Materials".

Introduction

This manual provides information for the operation, maintenance, and simple repair of the MVP Ultrabond Adhesive Systems. The following procedures are included:

- Step-by-step assembly and disassembly
- Installation, start-up, and shut-down instructions
- Step-by-step operation instructions

Please read this manual carefully and retain for future reference. Follow the steps in the order given, otherwise you may damage the equipment or injure yourself.

Component Assemblies

MVP's Ultrabond Adhesive Systems consists of multiple components. Each component has its own detailed manual and drawings. For complete repair and maintenance instructions, refer to the appropriate manuals.

- ❑ FRAME ASSEMBLIES
- ❑ CHOP CHECK PUMP ASSEMBLY
- ❑ DUO SS FLUID SECTIONS
- ❑ POWERSLIDE POWERHEAD
- ❑ PUTTY GUN

Air Requirements

8. The system requires a supply of air (30 cfm) and at least 100 psi (7 bar).
9. The unit requires a ½ inch (12 - 13 mm) inside diameter air hose minimum (use caution when using quick disconnects; they may restrict air flow).
10. Preferably the air will be clean, dry, and oil free.

Unit Overview

Below helps identify the main components the operator needs to know for proper operation for the unit.

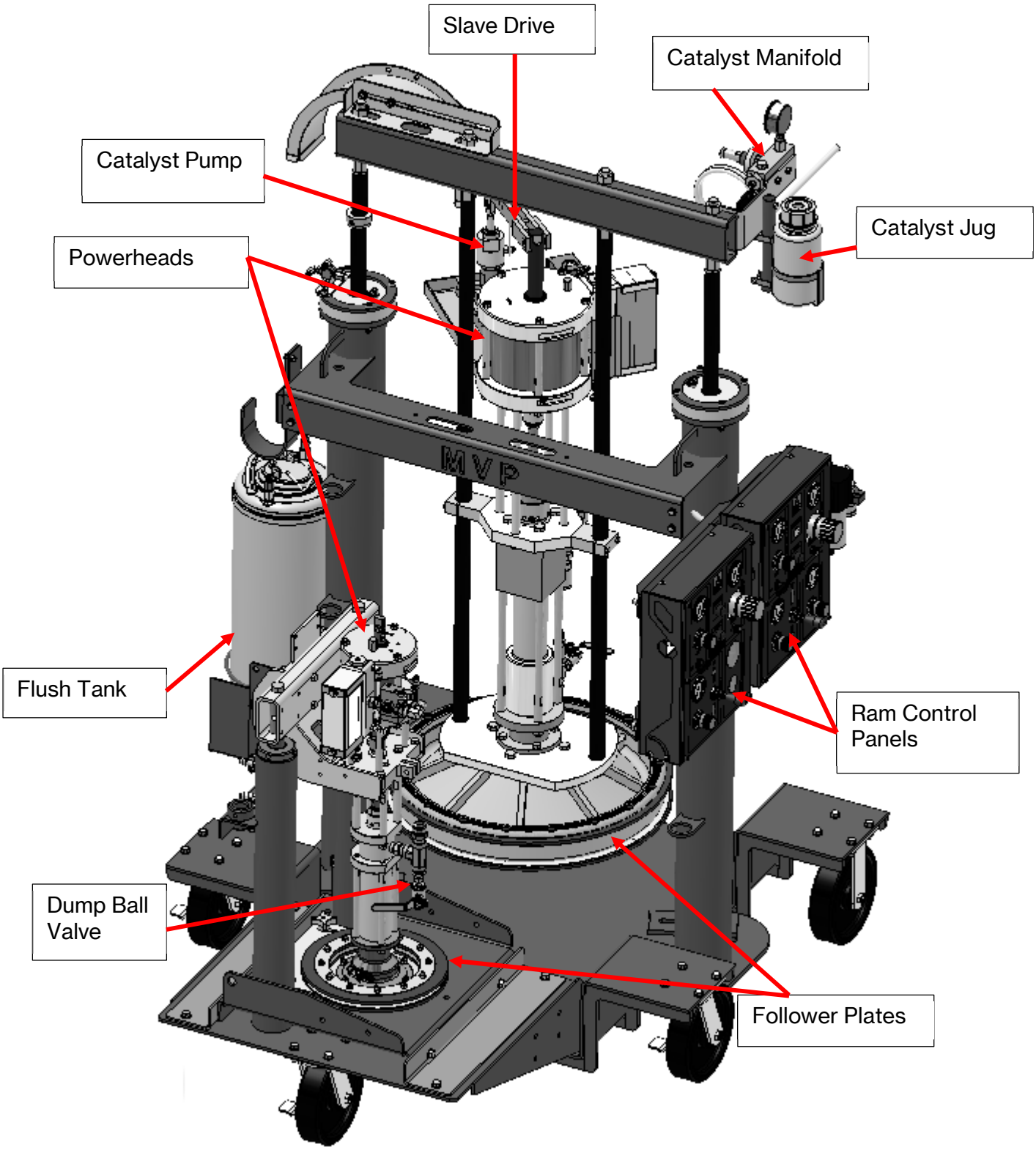

Overview of Controls

Following is a brief description of the main controls and their function. You will need to determine which of the control panels controls the Adhesive Pump and which one controls the Activator Pump. Some controls may be blanked out depending on the unit's configuration.

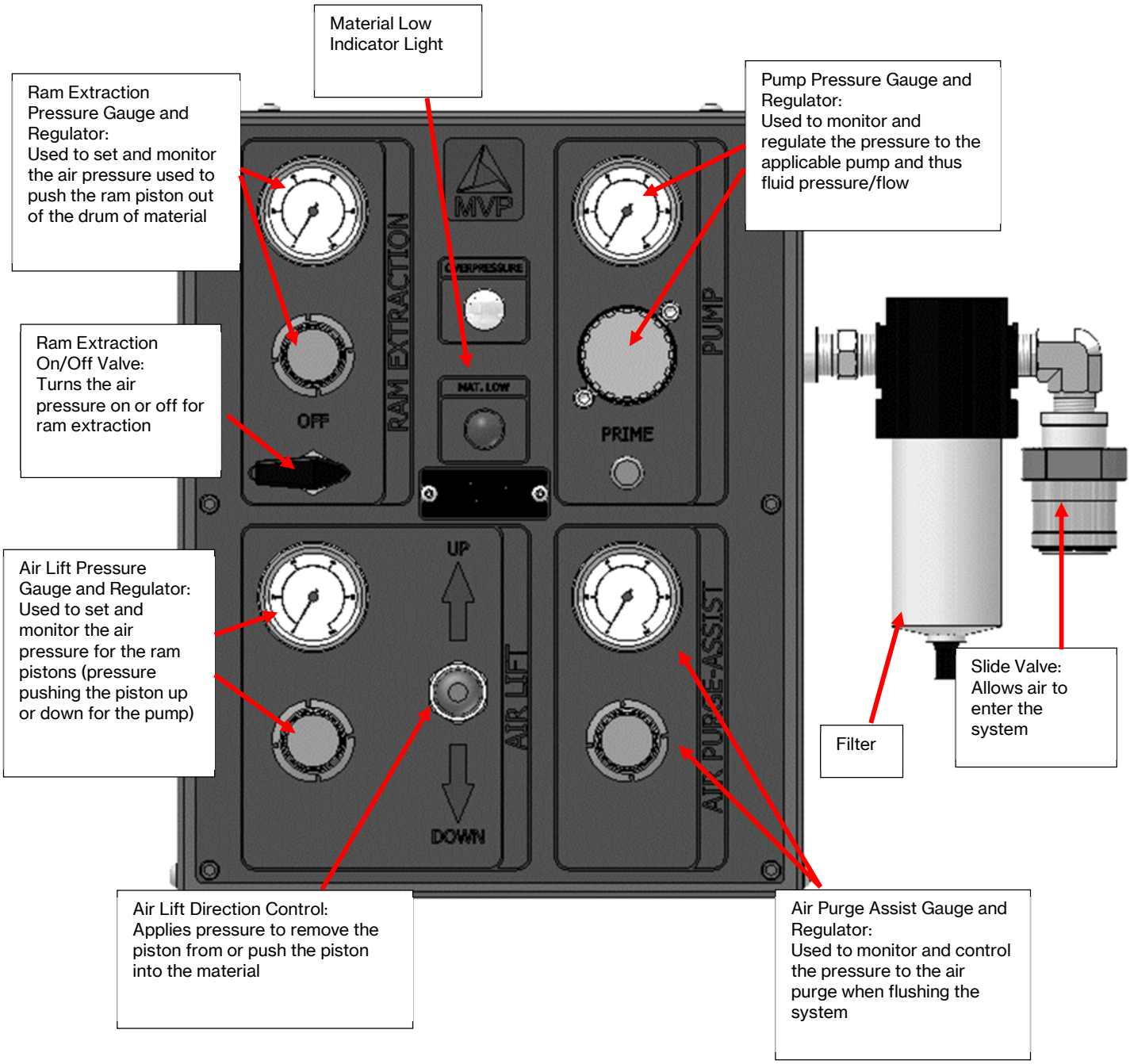

Getting Started

CAUTION

Always wear proper safety equipment (glasses, gloves, respirator, etc.) when working with dispensing equipment and before startup of the unit. Refer to and follow the requirements of the Material Safety Data Sheets (MSDS) supplied by your material manufacturer(s).

11. Unpack the unit and inspect for damage.
12. Check that all hoses are connected properly and do not show any wear or damage.
13. Install the flush tank in the flush tank bracket.
14. On the ram adhesive unit, check and adjust the ram lower limit by adjusting the bracket to adjust the ram stop position.
    - To set the low-level limit, loosen the bolt holding the shaft collar in place.
    - Slide the shaft collar to the desired position on the post and tighten the bolt back down.
15. Attach stainless steel hoses from the outlet of the ram pumps to the inlets of the unit.
16. Attach stainless steel hoses to the outlets of the unit.

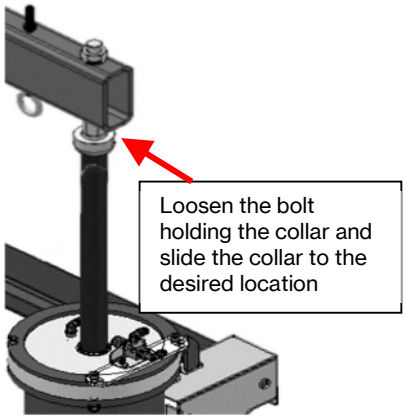

Note ***Stainless steel hoses kink easily when not under pressure, so use caution to avoid damage.***

17. Attach solvent flush hose to the outlet of the flush pump or flush tank.
18. Screw the pick-up wand into the solvent flush pump inlet.
19. Slide the main air supply valve to the **OFF** position.

Note ***The valve turns off the air supply to the air motor valve, thus stopping the pump.***

20. Connect ½ inch (12mm -13mm) air hose to the inlet port of the slide valve.
21. Press and turn all regulators on both control panels counterclockwise to full off, then close the slide valve on the control panel.

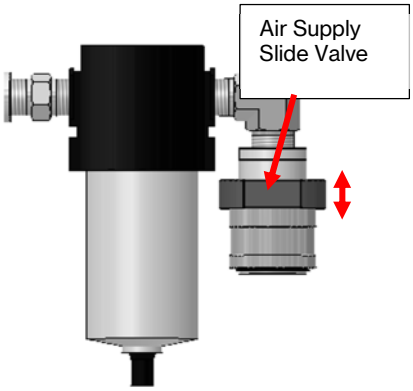

Priming the Unit

Prime Solvent

22. Make sure all regulators are turned counterclockwise to full off and close all ball valves.

23. Make sure ram extraction lever is off.
24. Secure all fittings and correct leaks if found.
25. If applicable to your unit, place solvent pump onto an approved container of the appropriate cleaning agent.
26. Slowly turn up regulator pressure to solvent pump or flush tank.

Note ***If pump is used, turn the regulator until the pump begins stroking.***

27. Secure solvent leaks, if any.
28. Bring solvent pump pressure up to between 35 and 40 psi (2.2 and 2.8 bar) on regulator gauge or 50 psi (3.5 bar) on flush tank.
29. Wait for solvent pump to stall or stop.
30. Turn the selector switch on the gun hose set to the flush side and press the button on the gun block to test the flush system.
31. Turn the selector switch to the other side for air purge and press the button on the gun block to test the air purge of the flush system.

Prime Adhesive and Activator Ram Transfer Pumps

32. Fill both pump packing nut solvent cups with ISO oil or equivalent.
33. Slowly turn up adhesive ram pressure to 30 psi (2 bar).
34. Slowly move the adhesive ram direction control lever to the **UP** position and release.
35. As ram begins to lift, check for hoses kinking or catching.
36. Allow ram to rise to the fully raised position to allow clearance for the drum of material.
37. Remove the drum cover and plastic cover from actuator.

Note ***If you are using a 55-gallon drum with a plastic liner, use the ring from the drum top or tape to hold the liner in place and prevent it from being pushed down into the drum.***

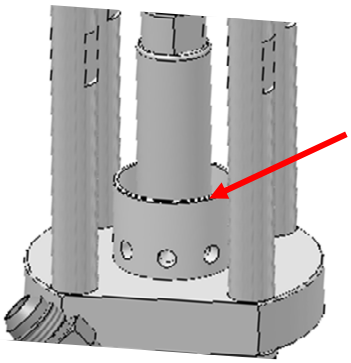

38. Use the plastic piston boot provided as a template to make more for future applications.
39. Place a plastic piston boot over the center of the drum.
40. Slide the drum into position under the ram.
41. Make sure the opening in the piston boot is lined up with the intake of the pump.
42. Open the vent on the bottom of the follower plate and place a small waste container underneath.
43. Slowly move the ram direction control lever to the **DOWN** position and release.

44. As the ram begins to move down, check for alignment of the piston and boot as it enters the drum and reposition accordingly.
45. Allow piston to continue down until it stops; you should hear and feel air venting out of the valve on the follower plate as the piston lowers.
46. Once piston and pump are down, turn the ram pressure up to 60 psi (4 bar) to allow additional venting.
47. Once air venting has stopped or material begins to flow, close the vent valve.
48. Repeat steps 18 - 26 for the activator side.

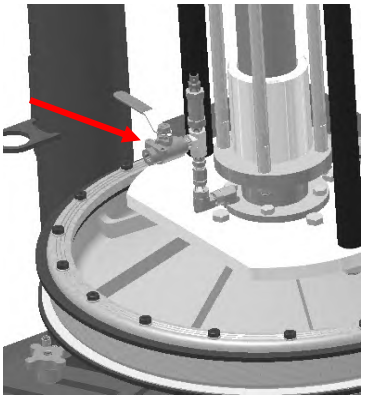

Prime Duo Unit and Dispensing Block

49. Fill solvent cups with ISO oil or equivalent.
50. Slowly turn up pump pressure on activator ram pump to 20 psi (1.2 bar).
51. As pump begins to stroke, check for leaks on all stainless-steel hose connections and secure if any are found.
52. Allow pump to continue until it stalls.
53. Repeat steps 28 - 31 for the adhesive ram pump.
54. Press and hold the priming button while slowly turning up the pump pressure on the duo unit to 20 psi (1.2 bar).

Note ***The ram pumps may begin stroking as well.***

55. Allow the pump to stall, then release the priming button.
56. Remove the mixer or night cap from the front of the dispensing block or gun.
57. Position the dispensing block/gun over an appropriate waste container to allow priming of lines.
58. Fully open the dispensing block or pull the trigger on the gun.
59. Allow the activator and adhesive to flow into the container until all air is removed from the lines.
60. Close the dispensing block/gun.
61. Position the outlet of block/gun over a flush container.
62. Press the air purge button.

CAUTION

A sudden purge of material from the dispensing block is likely and could splash.

63. Allow air to flow for 3 – 4 seconds.
64. Turn the selector switch to the solvent side and press the flush button to solvent purge for 3 – 4 seconds, again watching for splashing.
65. Repeat the flush process for both the adhesive and activator several times to properly flush the system.

Mixing and Dispensing

66. Apply lubricant to the threads of the static mixer and attach to the outlet on the dispensing block or gun.
67. Open the dispensing block/gun and allow mixed material to flow out of the mixer and into a waste container for 4 – 5 seconds.
68. Begin dispensing a bead of material and check for mix by reviewing uniformity of color.
69. Observe the action of the duo unit; if the pump dives (moves very quickly) on the downstroke, adjust the feed pumps by increasing pressure in 5 psi increments until diving stops.

CAUTION

Take special precaution when adjusting feed pumps. It is important not to run the pumps too high or they will overcome the valves in the duo unit and cause off ratio problems.

Check Output

70. Make sure the mixer is on the block.
71. Increase the duo unit pressure in 5 psi increments until the desired output is achieved.

Note ***The unit is capable of approximately 2 gallons per minute (GPM) with material that is 78 - 80° F.***

Note ***Once a desired output is reached, it is best to operate in this range and avoid continued adjustments. If the duo unit pressure is significantly increased make sure the ratios are accurate.***

Check Ratios

72. With the block/gun in the off position, remove the outlet plugs from the front of the dispensing block.
73. Attach and secure outlet cap and gasket to dispensing block.

74. If you are using the 1:1 Pro Gun, attach the ratio check mix housing to the front of the gun.
75. Place a waste container under each outlet, preferably identical in size and weight.
76. Open the valve on the block and allow material to flow for at least 10 seconds.
77. Close the dispensing block and weigh each cup.

Note ***There will always be small discrepancies in weight due to flow and density. If weights are off by more than 10%, the feed pumps may need to be adjusted.***

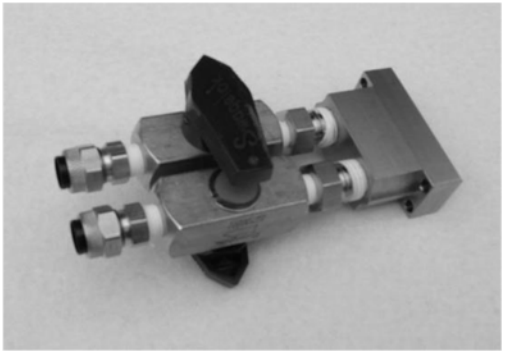

Figure 1. Ratio Check Mix Housing

78. If you need to compensate for ratios, do *one* of the following:
    - Decrease the feed pump of the higher weight material by 5 psi.
    - Increase the feed pump of the lower weight material by 5 psi.
79. Repeat steps 10 - 13 until accurate ratios are achieved.

Flushing and Shutting Down

When finished with dispensing, it is necessary to flush and clean the mixer and block.

80. Open the dispensing valve momentarily to allow the duo unit pump shafts to run to the fully lowered position.
81. Close the dispensing block valve all the way.
82. Position the outlet of the mixer over an approved waste container.
83. Slowly open the 3-way flush valve to air and allow air to purge for 4 – 5 seconds.
84. Turn the 3-way valve to solvent purge and flush for 4 – 5 seconds.
85. Repeat steps 4 and 5.
86. Remove the mixer housing and push out the mixer elements into a container for cleaning.
87. Use an appropriate bottle brush to clean the mixer housing and mixer elements.

88. Clean out the outlet ports as much as possible in the dispensing heads with solvent and brush.

89. Attach and secure the outlet cap on the end of the dispensing block.
90. Inspect the mixer elements for wear and breakage and replace if necessary.
91. If you are using a disposable mixer assembly check for blockages or hardened material buildup inside the mixer tube and replace as necessary.
92. Turn main air off to the system and clean the block handle.
93. Relieve the air pressure to the flush tank by lifting the relief valve ring.

Changing an Empty Drum

94. On the control panel, push the air lift direction control to the **UP** position, then release.
95. Turn the Air Lift pressure regulator to 0 (zero).
96. Turn the Ram Extraction valve to the **On** position.
97. Slowly turn up ram extraction regulator to approximately 20 psi until the pump and ram move up and out of drum slowly and evenly.
98. Check that the hoses are not catching or kinking as they go up.

WARNING

Excessive air pressure in the drum could cause the drum to rupture. Use minimum air pressure necessary to remove the ram from the drum. Do not use ram with damaged or dented drum.

99. When the lower seal on the ram is near the top of the drum air will begin to leak around the seal and the pump and ram will no longer be moving out of drum. Remove the tape holding the plastic boot to the ram and allow it to stay with the drum or fall into the empty drum.
100. Turn the ram extraction valve to the **Off** position to stop the air leak.
101. Slowly increase the Air Lift pressure regulator to 5 - 10 psi.
102. Pump and ram should slowly begin to lift (move up); check to make sure hoses are not catching or kinking and correct as necessary.
103. Allow the pump and ram to fully clear the drum.

Note ***It may be necessary to adjust both Air Lift and Ram Extraction pressures to facilitate removal without lifting the drum.***

104. After the pump and follower are removed, inspect, seal, and properly dispose of the protector gasket.
105. Clean any buildup of material off the follower gasket and follower plate.
106. Replace the empty drum with a full one and return to the Priming the Unit directions before dispensing.

System Components

Systems can be configured differently from the base lists below. Refer to the serial plates on system components to verify part numbers when ordering repair kits or replacement parts.

All service and repair manuals are available on our website at https://www.mvpind.com/application-support/technical-documents/.

IMA-CCP-ADH-HOD

Core System Parts	
Part Number	**Description**
PF-HN-16J-12-SS	Hex Nipple
7701-6-10	Poly Fitting
F-LN-04C	Lock Nut
APD-BRKT-HC-100	Hose Carrier
PF-SE-12-SS	Street Elbow
BV-88-316	Ball Valve
PF-HN-12-08-SS	Hex Nipple
PF-FT-12-SS	Female Tee
PF-HN-12-SS	Hex Nipple
PF-RB-16-12-SS	Reducer Bushing
60534-1	Support Hook
F-HN-04C	Hex Nut
F-HB-04C-12	Hex Bolt
02576	Spacer
APD-RA-5046-R	Support Panel
F-HN-06C	Hex Nut
F-SW-06	Lock Washer
F-FW-06	Flat Washer
F-HB-06C-16	Hex Bolt
VHPC-2200-ADH	Pump Assembly C
HOD-2000	Dispensing Head Assy - Adhesives
F-HN-08C	Hex Nut
F-HB-08C-16	Hex Bolt
PCN-1005	Auxiliary Panel Bracket
PCN-RAM-2	Single Ram Control Panel, Add On Unit
PCN-RAM-1	Single Ram Control Panel, Main Unit
PR-1054-ADH	Catalyst Bottle And Cap
PR-1053	Catalyst Container Holder
CM-2500-ADH-2	Catalyst Manifold
APD-1013	Manifold And Jug Bracket
55209-1	Flush Tank Assy. - 3 Gal
F-HN-05C	Hex Nut

Core System Parts	
Part Number	**Description**
F-SW-05	Lock Washer
F-HB-05C-16	Hex Bolt
6101-4-01	Flush Tank Bracket
APD-1007-A	Flush Tank Mount Plate
F-HB-08C-28-GR5	Hex Bolt
APD-1500-A	Adhesive Piston Assembly
CCP-29100-SS	Pump Assembly
PAT-CCP-TRAN-PCN	Transfer/Hardener Pump - Panel Controlled
APD-2000-BASE	Basic Ram Frame Assembly

Parts Drawings

The illustrations on the following pages are included based on the components ordered with your system and will assist with assembly and repair.

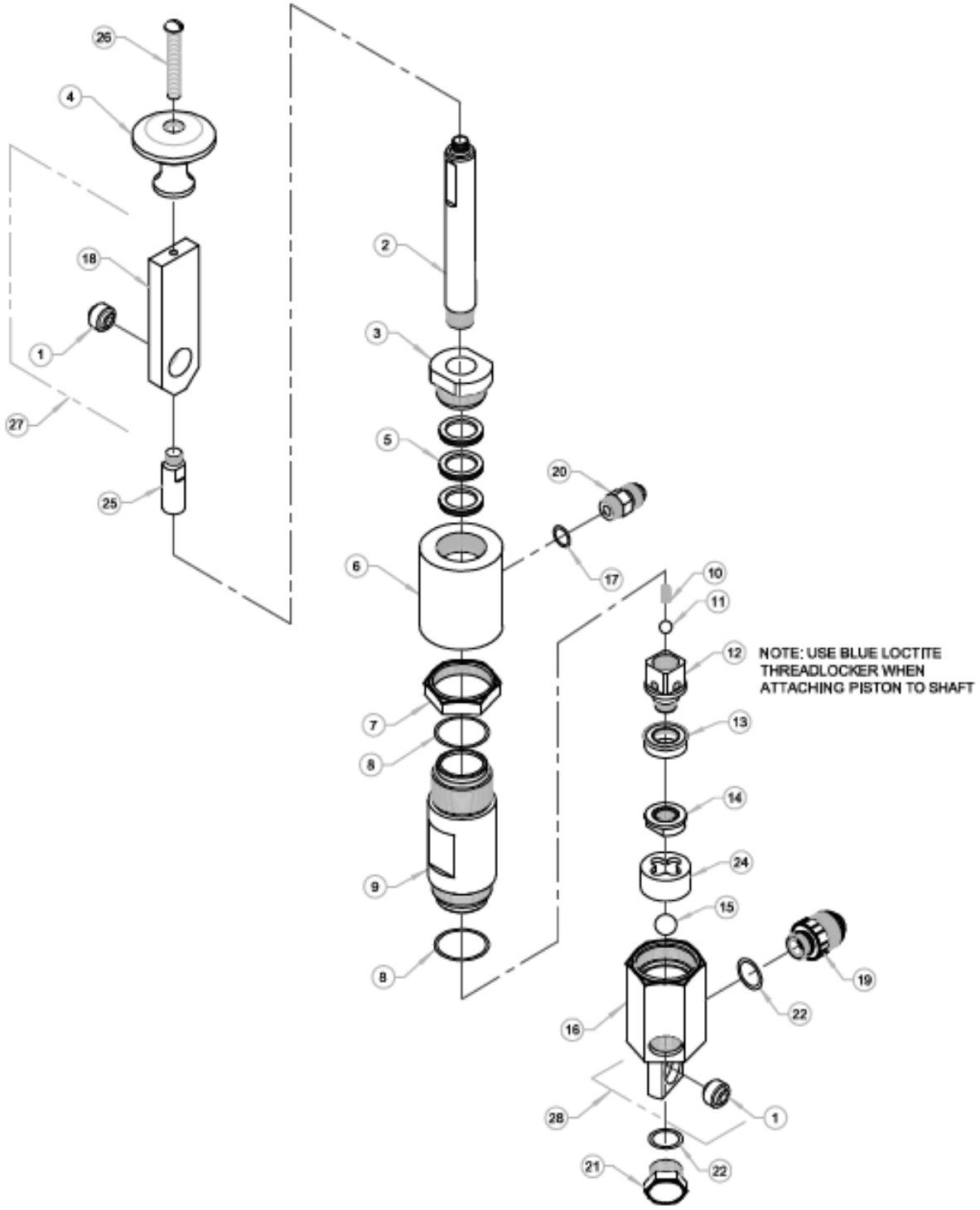

MAGNUM VENUS PLASTECH

Assy – Catalyst Pump	VHPC-2200-ADH

REV. - 02-14-08 BT2
REV. A - ADDED THREADLOCKER NOTE 05-15-08 BT2
REV. B - ITEM 17 WAS O-S-013, ITEM 22 WAS O-S-3-908, KIT WAS VHPC-2200-HIS-SK 02-05-16 BT2

ASSY - CATALYST PUMP VHPC-2200-ADH

PARTS LIST

ITEM	PART NO.	QTY	DESCRIPTION
1	9202-1-1	2	SPHERICAL BEARING
2	VHPC-2218	1	PISTON ROD
3	VHPC-2207	1	PACKING NUT
4	50100-1	1	PRIMING KNOB
* 5	VHPC-2210	3	SEAL
6	VHPC-2217	1	OUTLET BODY
7	VHPC-2221	1	LOCK NUT
* 8	O-E-025	2	O-RING
9	VHPC-2216	1	CYLINDER
10	04009-1	1	PISTON SPRING
11	03069	1	3/8" SS BALL
12	VHPC-2211	1	PISTON BODY
* 13	VHPC-2222	1	PISTON SEAL
14	VHPC-2212	1	SEAL RETAINER
15	VHPC-2223	1	5/8" SS BALL
16	VHPC-2215	1	INLET BODY
* 17	O-E-013	1	O-RING
18	50220-1	1	BUSHING BLOCK
19	HF-12F-12J-SS	1	INLET FITTING
20	MAX-2022	1	MATERIAL FITTING
21	VHPC-2224	1	PORT PLUG
* 22	O-E-3-908	2	O-RING
24	VHPC-2220	1	BALL STOP
25	CCP-1012	1	PISTON ROD EXTENSION
26	02849-16	1	MACHINE SCREW

* ASTERISKS DEPICT PARTS IN SEAL KIT

REPAIR KITS

	PART NO.	DESCRIPTION
*	VHPC-2200-ADH-SK	SEAL KIT

OPTIONAL PARTS & ASSEMBLIES

ITEM	PART NO.	QTY	DESCRIPTION
27	50220-3	1	BUSHING BLOCK W/ BEARING
28	VHPC-2215-B	1	INLET BODY W/ BEARING

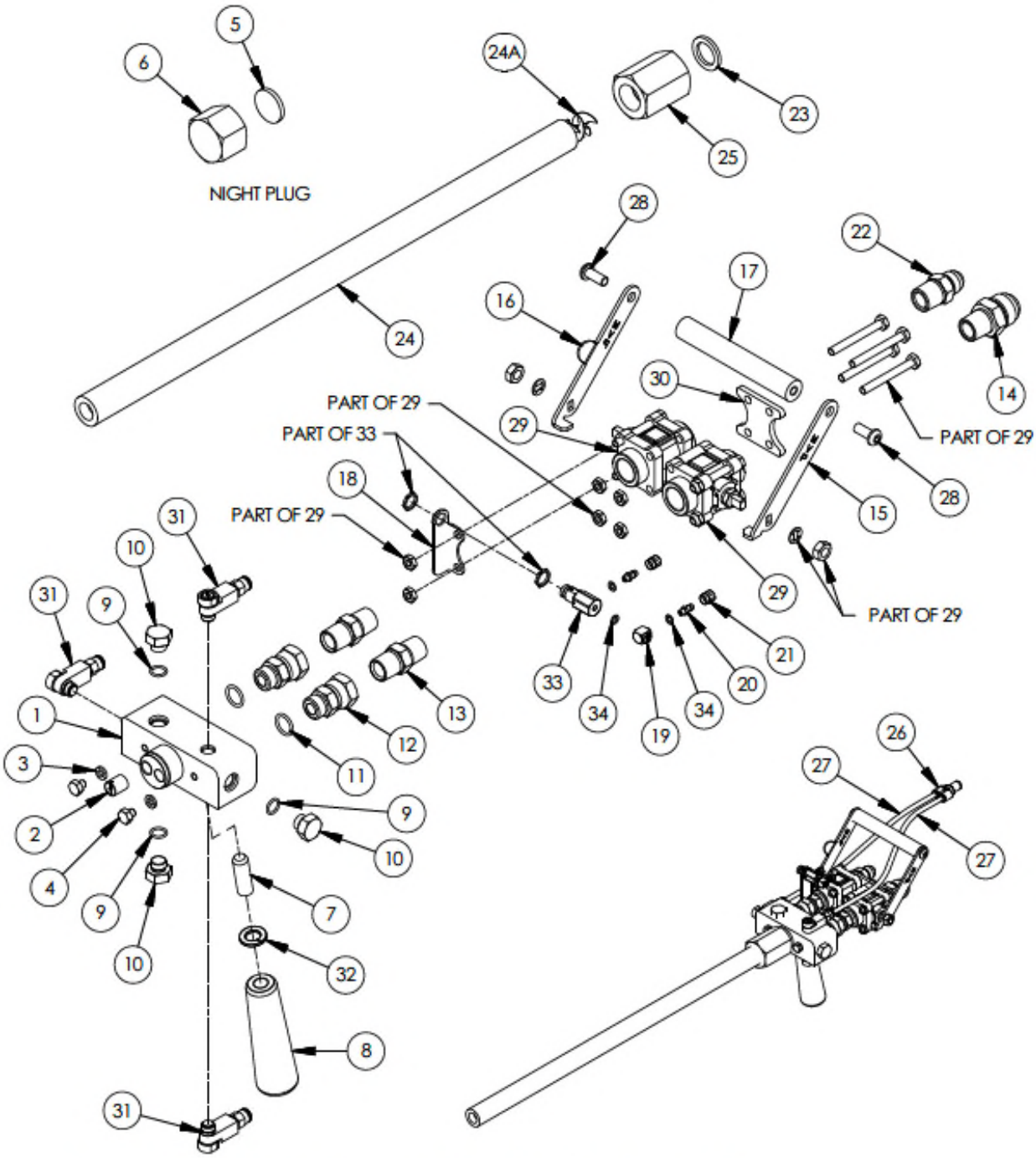

MAGNUM VENUS PRODUCTS

DISPENSING HEAD / ADHESIVES	HOD-2000

REV: SHEET 1 / 2 7/14/2016

	Parts List			
	ITEM	PART NUMBER	QTY	DESCRIPTION
	1	HOD-2001	1	DISPENSING BLOCK
§	2	HOD-2002-X	1	RATIO PLUG
*	3	02441-1	2	SEAL - GUN HEAD PLUG
	4	53110-1	2	GUN HEAD PLUG
*	5	HOD-1012	1	CAP PLUG SEAL
	6	HOD-1002	1	CAP PLUG
	7	F-SS-08C-24	1	SET SCREW - HANDLE STUD
	8	HOD-1004	1	HANDLE
*	9	O-E-013	3	O-RING
	10	CM-1053	3	PLUG FITTING
*	11	O-V-3-908	2	O-RING
	12	PF-SW-12MS-08F-SS	2	SWIVEL FITTING
	13	PF-HN-08-SS	2	HEX NIPPLE
	14	PF-HN-16J-08-SS	1	HOSE ADAPTER
	15	HOD-1008-L	1	LEFT VALVE LEVER
	16	HOD-1008-R	1	RIGHT VALVE LEVER
	17	HOD-1010	1	HANDLE
	18	HOD-1009	1	BRACKET - PUMP AIR SIGNAL VALVE
	19	TRU-1021	1	SWIVEL ELBOW FITTING
	20	7701-6-3	2	10-32 BARBED FITTING
	21	7701-2-1	2	HOSE CLAMP - POLY TUBE
	22	PF-HN-08-08J-SS	1	HEX NIPPLE
*	23	02029-1	1	NOZZLE CAP SEAL- HV POUR UNIT
	24	05260	1	MIXER TUBE
	25	54861-1	1	UNION
	26	06946	1	POLY Y FITTING
*	27	01443	2 FT	TUBE (2 - 1' SECTIONS)
	28	F-BHCS-05C-12	2	BUTTON HEAD CAP SCREW
	29	HOD-2011-BV	2	BALL VALVE
	30	HOD-2008	1	BALL VALVE TIE BRACKET - HOD
	31	HOD-FV-1000	3	FLUSH VALVE
	32	F-SW-08	1	LOCK WASHER
	33	09169	1	3-WAY VALVE
*	34	7304-3-1	3	NYLON SEAL

§ NOTE:
THE INSIDE DIAMETER OF ITEM 2 (HOD-2002-X) CHANGES WITH THE VISCOSITY OF THE HARDENER USED. THREE SIZES ARE INCLUDED INITIALLY WITH THE GUN: HOD-2002-3, HOD-2002-5 AND HOD-2002-7. OPTIONAL SIZES NOT INCLUDED BUT AVAILABLE ARE HOD-2002-1, HOD-2002-9, AND HOD-2002-11.

REPAIR KITS:
* HOD-2000-SK REPAIR KIT (INCLUDES O-A-007, O-E-008, 5104-21-1, AND 5104-26-1 FROM HOD-FV-1000)
MPD-9000-VK REPAIR KIT FOR HOD-2011-BV

AVAILABLE PARTS:
24A MPD-9750-03 REPLACEMENT MIXER (QTY. OF 4 FILL MIXER TUBE)

MAGNUM VENUS PRODUCTS

DISPENSING HEAD / ADHESIVES	HOD-2000

REV: SHEET 2 / 2 7/14/2016

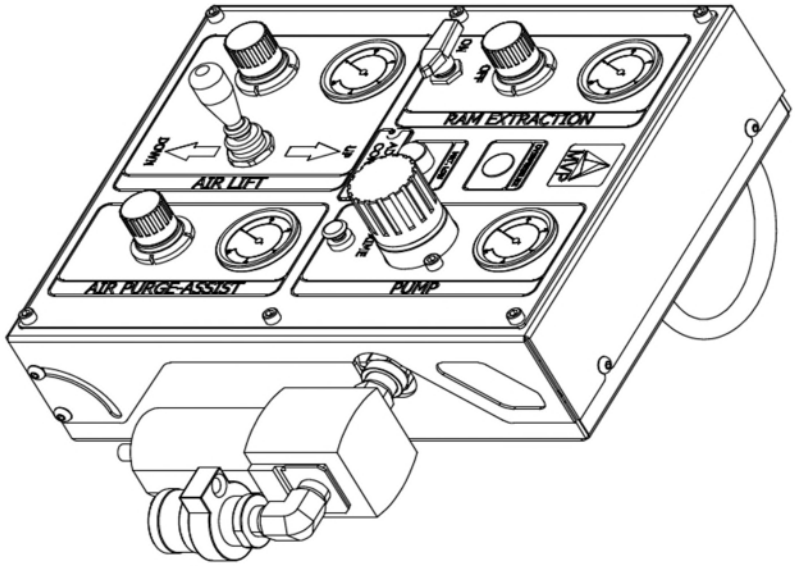

REVISION HISTORY

REV	DESCRIPTION	DATE	APPROVED
-	INITIAL RELEASE		

MVP
MAGNUM VENUS PRODUCTS

CORPORATE HEADQUARTERS
10533 Hardin Valley Road
Knoxville, TN 37932
865.686.5670

TECHNOLOGY CENTER
1842 Weld Avenue
Kent, WA 98032
253.854.2660

CONFIDENTIAL

This document contains proprietary information that is the sole property of MVP. Distribution, reproduction, disclosure or use by others, in part or in whole, is not permitted without prior written permission of MVP and all rights herein reserved.

TOLERANCES
UNLESS OTHERWISE SPECIFIED
ALL DIMENSIONS ARE IN INCHES
DECIMALS: .XX ± .010, .XXX ± .003, .TW ± .005
FRACTIONS: X/Y ± 1/32", ANGULAR: XX° ± 1/2°
125
"DO NOT SCALE DRAWING"
ALL DIMENSIONS APPLY AFTER FINISH
BREAK SHARP EDGES .005 MAX RADIUS
.005 X 45° MAX CHAMFER

NEXT FINAL | NEXT ASSY | FINAL ASSY
QTY PER ASSY | WHERE USED

SPECIFICATION: ASSEMBLY
DESIGNED: BSTAPLETON | DRAWN: BSTAPLETON | DATE: 12/2/2016
DESCRIPTION: SINGLE RAM CONTROL PANEL, MAIN UNIT
PROJECT
DWG NO: PCN-RAM-1 | SHEET: 1 OF 6 | REV: -

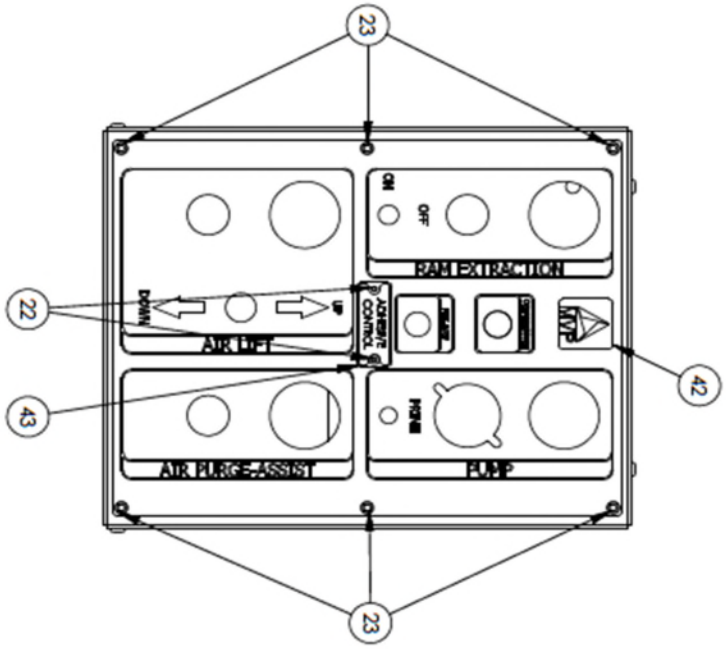

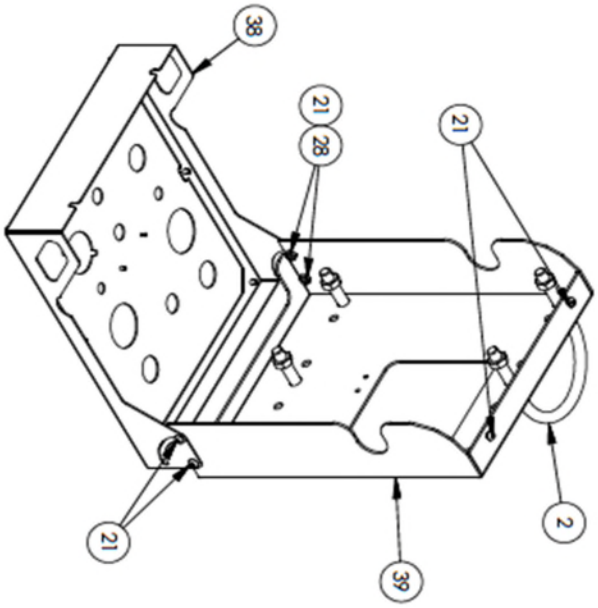

NOTES:

APPLY LOCTITE TO ALL FASTENERS EXCEPT MOUNTING U BOLTS

QTY	ITEM	PART NUMBER	DESCRIPTION
1	43	PCN-1007	ADHESIVE BADGE
1	42	PCN-1006	LASER ETCHED PANEL FACE
1	39	PCN-1002	PANEL, BACK PLATE
1	38	PCN-1001	PANEL, FRONT
4	28	F-HN-04C	HEX NUT
6	23	F-CS-04C-06	SOCKET HEAD CAP SCREW
2	22	F-BHCS-8-32-06	BUTTON HEAD CAP SCREW
6	21	F-BHCS-04C-08	BUTTON HEAD CAP SCREW
2	2	06289	5" U BOLT

Parts List

MAGNUM VENUS PRODUCTS

CORPORATE HEADQUARTERS: 10555 Huron Valley Road, Knoxville, TN 37932, 865.686.5670

TECHNOLOGY CENTER: 18642 Frost Avenue, Kent, WA 98032, 253.854.5640

"CONFIDENTIAL"

This document contains proprietary information that is the property of MVP Corporation and should not be reproduced, disclosed or used by others, in part or in whole, is not permitted without prior written permission of MVP and all rights herein reserved.

TOLERANCES: UNLESS OTHERWISE SPECIFIED ALL DIMENSIONS ARE IN INCHES

REACTIONAL: .XX ± .010, .XXX ± .005, TW ± .005

"DO NOT SCALE DRAWING"

ALL DIMENSIONS ARE AFTER FINISH, BREAK SHARP EDGES .005 MAX RADIUS .005 X 45° MAX CHAMFER

SPECIFICATION: ASSEMBLY

DESIGNED: BSTAPLETON

DRAWN: BSTAPLETON

DATE: 12/2/2016

DESCRIPTION: SINGLE RAM CONTROL PANEL, MAIN UNIT

PROJECT

DWG NO: PCN-RAM-1

SHEET: 2 OF 6

REV: -

NEXT ASSY | FINAL ASSY

QTY / REF ASSY

MATERIAL LABEL

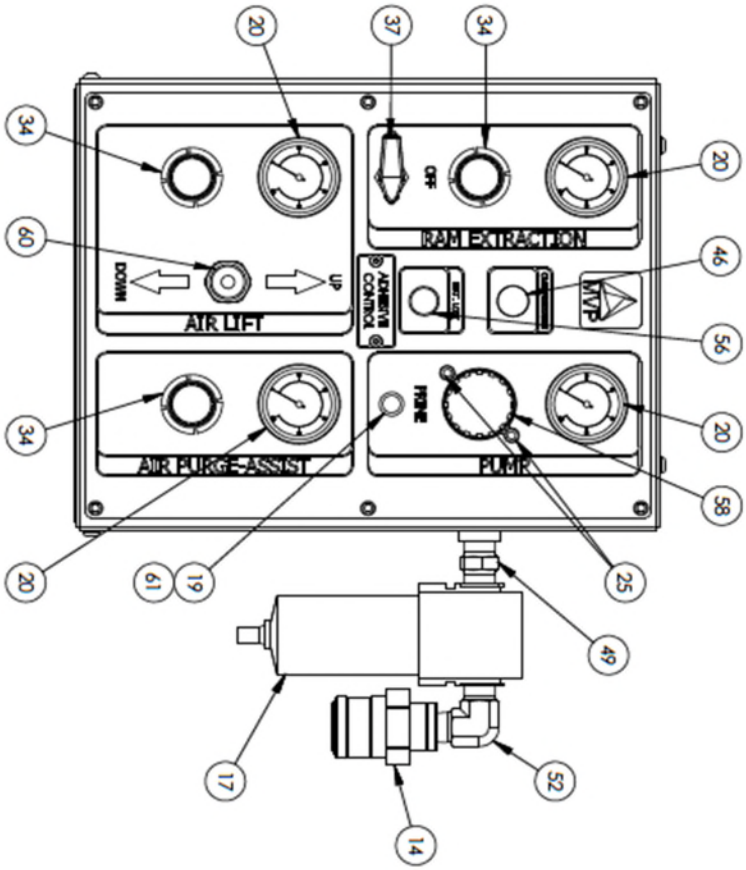

QTY	ITEM	PART NUMBER	DESCRIPTION
1	61	PNE-VPN-101	PANEL NUT
1	20	PNE-TOG-103-3P	LEVER TOGGLE VALVE - 3 POSITION
1	58	PNE-REG-101	REGULATOR
1	56	PNE-IND-102	RED/GREEN INDICATOR
2	52	PF-ME-08	MALE ELBOW
1	49	PF-HN-08	HEX NIPPLE
1	46	PCN-1010	ENCLOSURE PLUG
1	37	MRD-1017	BALL VALVE
3	34	INV-CB-RG-1	250 REGULATOR
2	25	F-CS-M6-16	HEX SOCKET CAP SCREW - Metric
4	20	AG-PM2-100-P	PANEL MOUNT GAUGE
1	19	8407-5-1	PUSH BUTTON
1	17	8404-1-1	FILTER
1	14	07327	SLIDE VALVE

Parts List

MAGNUM VENUS PRODUCTS

CORPORATE HEADQUARTERS
15233 Heritage Valley Road
Knoxville, TN 37922
865.684.5470

3PO PROJECT CENTER
18842 West Avenue
Kent, WA 98032
253.854.3440

"CONFIDENTIAL"

The document contains proprietary information that is the property of MVP. Distribution to others, in part or in whole, is not permitted without prior written permission of MVP and all rights herein reserved.

TOLERANCES
UNLESS OTHERWISE SPECIFIED
ALL DIMENSIONS ARE IN INCHES
DECIMALS: .X ± .010, .XX ± .005, .XXX ± .005
FRACTIONS: ±1/64", ANGULAR: XX° ± 1/2°

DO NOT SCALE DRAWING
ALL DIMENSIONS APPLY AFTER FINISH
BREAK SHARP EDGES .005 MAX EACH
.010 X 45° MAX CHAMFER

SPECIFICATION
ASSEMBLY

DESIGNED: BSTAPLETON
DESCRIPTION: SINGLE RAM CONTROL PANEL, MAIN UNIT

DRAWN: BSTAPLETON
DATE: 12/2/2016

PROJECT

NEXT ASSY: FINAL ASSY
NEXT ASSY: FINAL ASSY

DRAWING NO: PCN-RAM-1
SHEET: 3 OF 6
REV: -

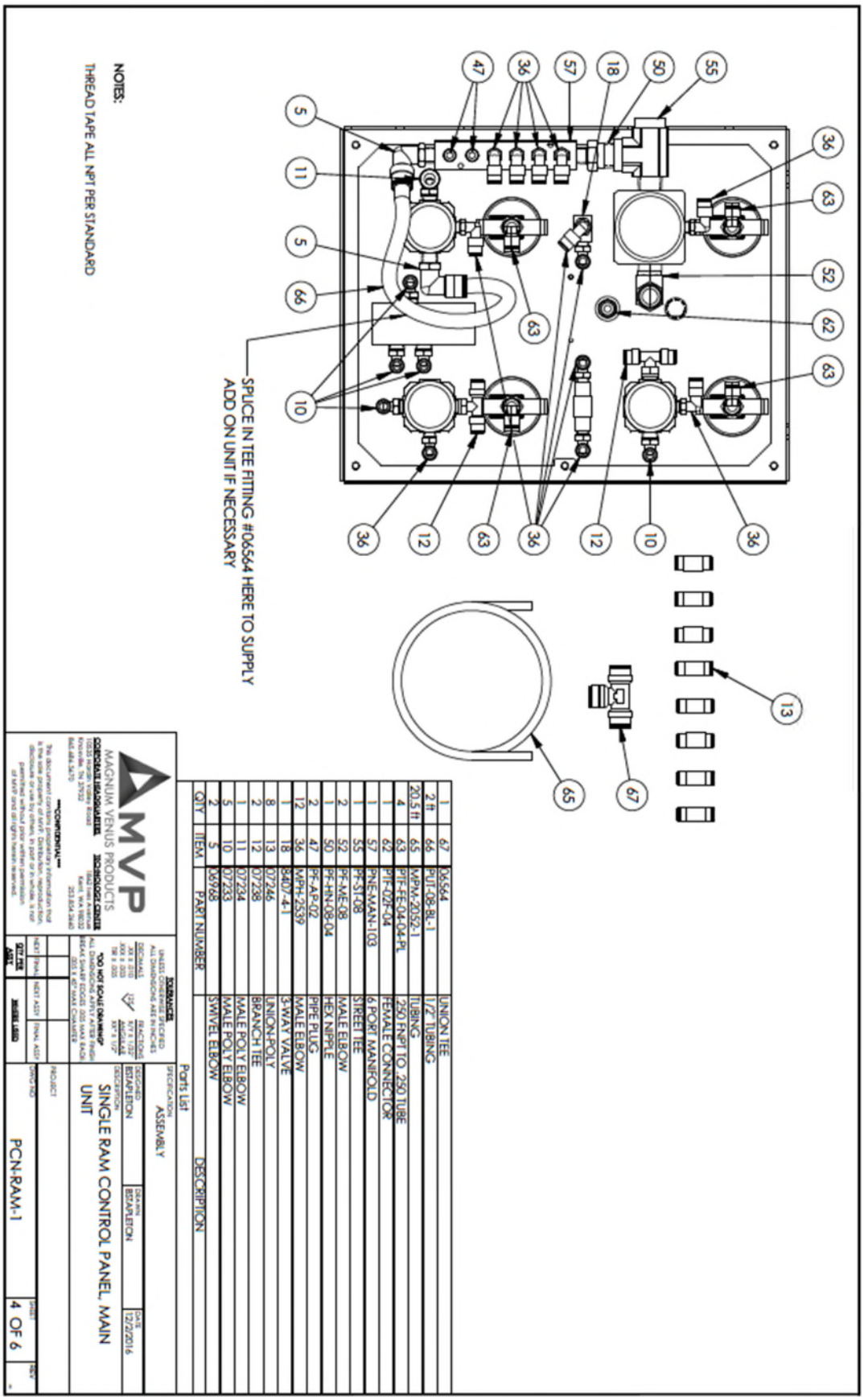
SPLICE IN TEE FITTING #06564 HERE TO SUPPLY
ADD ON UNIT IF NECESSARY
NOTES:
THREAD TAPE ALL NPT PER STANDARD
MAGNUM VENUS PRODUCTS
SINGLE RAM CONTROL PANEL, MAIN UNIT
PCN-RAM-1
4 OF 6
12/2/2016
ESTAPLETON
ASSEMBLY
Parts List
QTY ITEM PART NUMBER DESCRIPTION
1 67 06564 UNION TEE
2 ft 66 PUT-08-BL-1 1/2" TUBING
20.5 ft 65 MPM-20152-1 TUBING
4 63 PTF-FE-04-04-PL 250 FNPT TO 250 TUBE
1 62 PTF-02F-04 FEMALE CONNECTOR
1 57 PNE-MAN-103 6 PORT MANIFOLD
1 55 PF-ST-08 STREET TEE
2 52 PF-ME-08 MALE ELBOW
1 50 PF-HN-08-04 HEX NIPPLE
2 47 PF-AP-02 PIPE PLUG
12 36 MPH-2539 MALE ELBOW
1 18 S40-4-1 3-WAY VALVE
8 13 07246 UNION-POLY
2 12 07238 BRANCH TEE
1 11 07234 MALE POLY ELBOW
5 10 07233 MALE POLY ELBOW
2 5 L8928 SWIVEL ELBOW

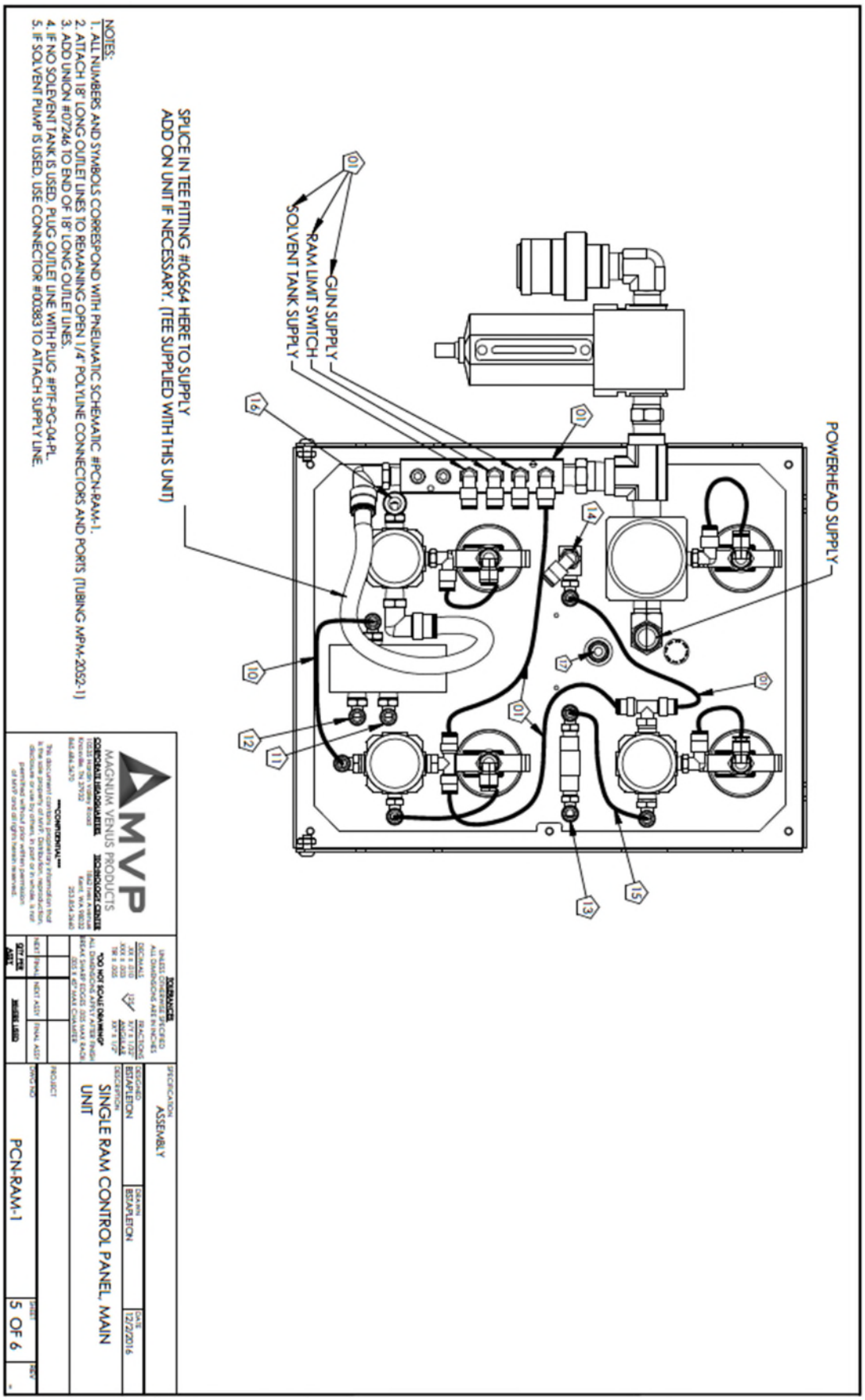
POWERHEAD SUPPLY
GUN SUPPLY
RAM LIMIT SWITCH
SOLVENT TANK SUPPLY
SPLICE IN TEE FITTING #06564 HERE TO SUPPLY
ADD ON UNIT IF NECESSARY. (TEE SUPPLIED WITH THIS UNIT)
NOTES:
1. ALL NUMBERS AND SYMBOLS CORRESPOND WITH PNEUMATIC SCHEMATIC #PCN-RAM-1.
2. ATTACH 18" LONG OUTLET LINES TO REMAINING OPEN 1/4" POLYLINE CONNECTORS AND PORTS (TUBING MPM-2052-1)
3. ADD UNION #07246 TO END OF 18" LONG OUTLET LINES.
4. IF NO SOLEVENT TANK IS USED, PLUG OUTLET LINE WITH PLUG #PTF-PG-04-PL.
5. IF SOLVENT PUMP IS USED, USE CONNECTOR #00383 TO ATTACH SUPPLY LINE.
MVP
MAGNUM VENUS PRODUCTS
CORPORATE HEADQUARTERS
TECHNOLOGY CENTER
"CONFIDENTIAL"
TOLERANCES
UNLESS OTHERWISE SPECIFIED
ALL DIMENSIONS ARE IN INCHES
DECIMALS
.XX ± .010
.XXX ± .005
.XXXX ± .0005
FRACTIONS
1/1 ± 1/32
ANGULARS
XX° ± 1/2°
"DO NOT SCALE DRAWING"
ALL DIMENSIONS APPLY AFTER FINISH
BREAK SHARP EDGES .005 MAX RADIUS
.005 ± .1 OF MAX DIAMETER
SPECIFICATION
ASSEMBLY
DRAWN BY
BEARPLETON
DESIGNED BY
BEARPLETON
DATE
12/7/2016
SINGLE RAM CONTROL PANEL, MAIN UNIT
PROJECT
NEXT ASSY
FINAL ASSY
SIZE
PCN-RAM-1
SHEET
5 OF 6
REV
-

REVISION HISTORY			
REV	DESCRIPTION	DATE	APPROVED
-	INITIAL RELEASE		
A	ADDED 2) 07246, ADDED F-HB-08C-16, F-FW-08 AND F-HN-08C	10/3/2019	BT2

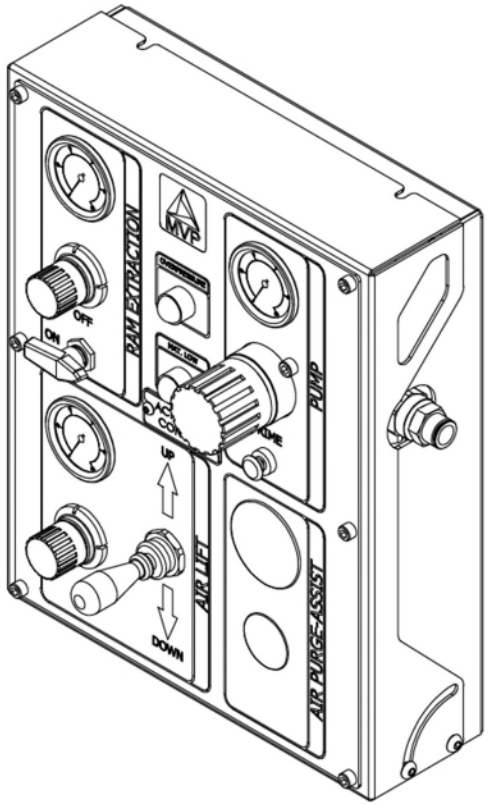

MVP
MAGNUM VENUS PRODUCTS

CORPORATE HEADQUARTERS TECHNOLOGY CENTER
10535 Hardin Valley Road, Knoxville, TN 37932, 865.686.5670
1862 Ives Avenue, Kent, WA 98032, 253.854.2660

CONFIDENTIAL
This document contains proprietary information that is the sole property of MVP. Distribution, reproduction, disclosure or use by others, in part or in whole, is not permitted without prior written permission of MVP and all rights herein reserved.

TOLERANCES
UNLESS OTHERWISE SPECIFIED
ALL DIMENSIONS ARE IN INCHES

DECIMALS		FRACTIONS
.XX ± .010	125	X/Y ± 1/32"
.XXX ± .003		ANGULAR
TIR ± .005		XX° ± 1/2°

DO NOT SCALE DRAWING
ALL DIMENSIONS APPLY AFTER FINISH
BREAK SHARP EDGES .005 MAX RADIUS
.005 X 45° MAX CHAMFER

NEXT	FINAL	NEXT ASSY	FINAL ASSY
QTY PER ASSY		WHERE USED	

SPECIFICATION: ASSEMBLY

DESIGNED	DRAWN	DATE
BSTAPLETON	BSTAPLETON	12/2/2016

DESCRIPTION: SINGLE RAM CONTROL PANEL, ADD ON UNIT

PROJECT

DWG NO	SHEET	REV
PCN-RAM-2	1 OF 6	A

MVP MAGNUM VENUS PRODUCTS

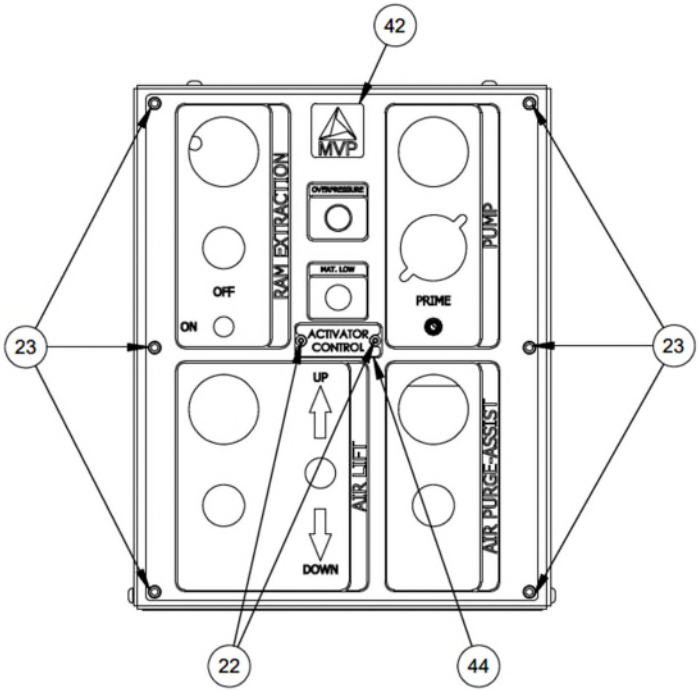

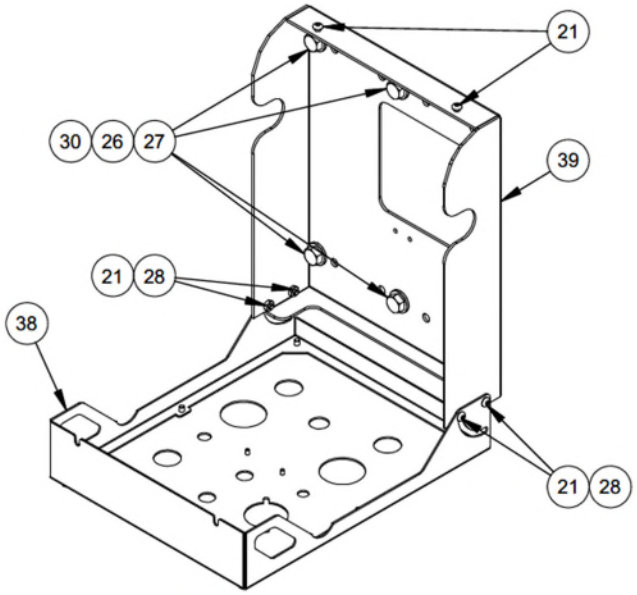

QTY	ITEM	PART NUMBER	DESCRIPTION
1	44	PCN-1008	ACTIVATOR BADGE
1	42	PCN-1006	LASER ETCHED PANEL FACE
1	39	PCN-1002	PANEL BACK PLATE
1	38	PCN-1001	PANEL FRONT
4	30	F-HN-08C	HEX NUT
4	28	F-HN-04C	HEX NUT
4	27	F-HB-08C-16	HEX BOLT
8	26	F-FW-08	FLAT WASHER
6	23	F-CS-04C-06	SOCKET HEAD CAP SCREW
2	22	F-BHCS-832-06	BUTTON HEAD CAP SCREW
6	21	F-BHCS-04C-08	BUTTON HEAD CAP SCREW

Parts List

NOTES:

APPLY LOCTITE TO ALL FASTENERS EXCEPT MOUNTING U BOLTS

MVP
MAGNUM VENUS PRODUCTS

CORPORATE HEADQUARTERS TECHNOLOGY CENTER
10535 Hardin Valley Road
Knoxville, TN 37932
865.686.5670

1862 Ives Avenue
Kent, WA 98032
253.854.2660

CONFIDENTIAL
This document contains proprietary information that is the sole property of MVP. Distribution, reproduction, disclosure or use by others, in part or in whole, is not permitted without prior written permission of MVP and all rights herein reserved.

TOLERANCES
UNLESS OTHERWISE SPECIFIED
ALL DIMENSIONS ARE IN INCHES

DECIMALS
.XX ± .010
.XXX ± .003
TIR ± .005

125

FRACTIONS
X/Y ± 1/32"
ANGULAR
XX° ± 1/2°

DO NOT SCALE DRAWING
ALL DIMENSIONS APPLY AFTER FINISH
BREAK SHARP EDGES .005 MAX RADI.
.005 X 45° MAX CHAMFER

NEXT	FINAL	NEXT ASSY	FINAL ASSY
QTY PER ASSY		WHERE USED	

SPECIFICATION: ASSEMBLY

DESIGNED	DRAWN	DATE
BSTAPLETON	BSTAPLETON	12/2/2016

DESCRIPTION: SINGLE RAM CONTROL PANEL, ADD ON UNIT

PROJECT

DWG NO: PCN-RAM-2

SHEET: 2 OF 6

REV: A

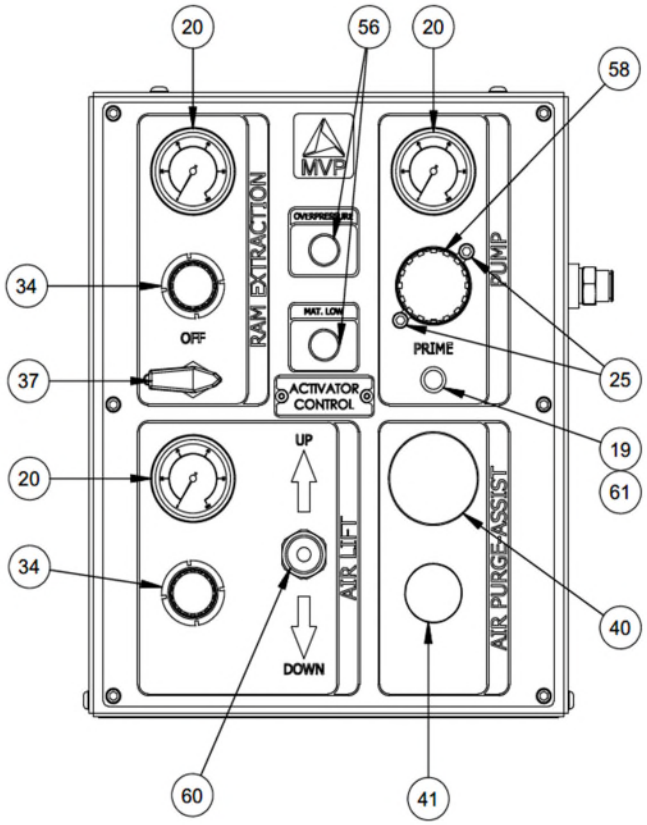

REVISION HISTORY			
REV	DESCRIPTION	DATE	APPROVED
-	INITIAL RELEASE		
A	ADDED 2) 07246, ADDED F-HB-08C-16, F-FW-08 AND F-HN-08C	10/3/2019	BT2

QTY	ITEM	PART NUMBER	DESCRIPTION
1	61	PNE-VPN-101	PANEL NUT
1	60	PNE-TOG-106-3P	LEVER TOGGLE VALVE - 3 POSITION
1	58	PNE-REG-101	REGULATOR
2	56	PNE-IND-102	RED/GREEN INDICATOR
1	41	PCN-1004	ENCLOSURE PLUG
1	40	PCN-1003	ENCLOSURE PLUG
1	37	MRD-1017	BALL VALVE
2	34	INV-CB-RG-1	.250" REGULATOR
2	25	F-CS-M6-16	HEX SOCKET CAP SCREW - Metric
3	20	AG-PM2-100-P	PANEL MOUNT GAUGE
1	19	8407-5-1	PUSH BUTTON

Parts List

MVP
MAGNUM VENUS PRODUCTS

CORPORATE HEADQUARTERS TECHNOLOGY CENTER
10535 Hardin Valley Road
Knoxville, TN 37932
865.686.5670

1862 Ives Avenue
Kent, WA 98032
253.854.2660

CONFIDENTIAL
This document contains proprietary information that is the sole property of MVP. Distribution, reproduction, disclosure or use by others, in part or in whole, is not permitted without prior written permission of MVP and all rights herein reserved.

TOLERANCES
UNLESS OTHERWISE SPECIFIED
ALL DIMENSIONS ARE IN INCHES

DECIMALS
.XX ± .010
.XXX ± .003
TIR ± .005

125

FRACTIONS
X/Y ± 1/32"
ANGULAR
XX° ± 1/2"

DO NOT SCALE DRAWING
ALL DIMENSIONS APPLY AFTER FINISH
BREAK SHARP EDGES .005 MAX RADIUS
.005 X 45° MAX CHAMFER

NEXT	FINAL	NEXT ASSY	FINAL ASSY
QTY PER ASSY		WHERE USED	

SPECIFICATION: ASSEMBLY

DESIGNED	DRAWN	DATE
BSTAPLETON	BSTAPLETON	12/2/2016

DESCRIPTION: SINGLE RAM CONTROL PANEL, ADD ON UNIT

PROJECT

DWG NO: PCN-RAM-2

SHEET: 3 OF 6

REV: A

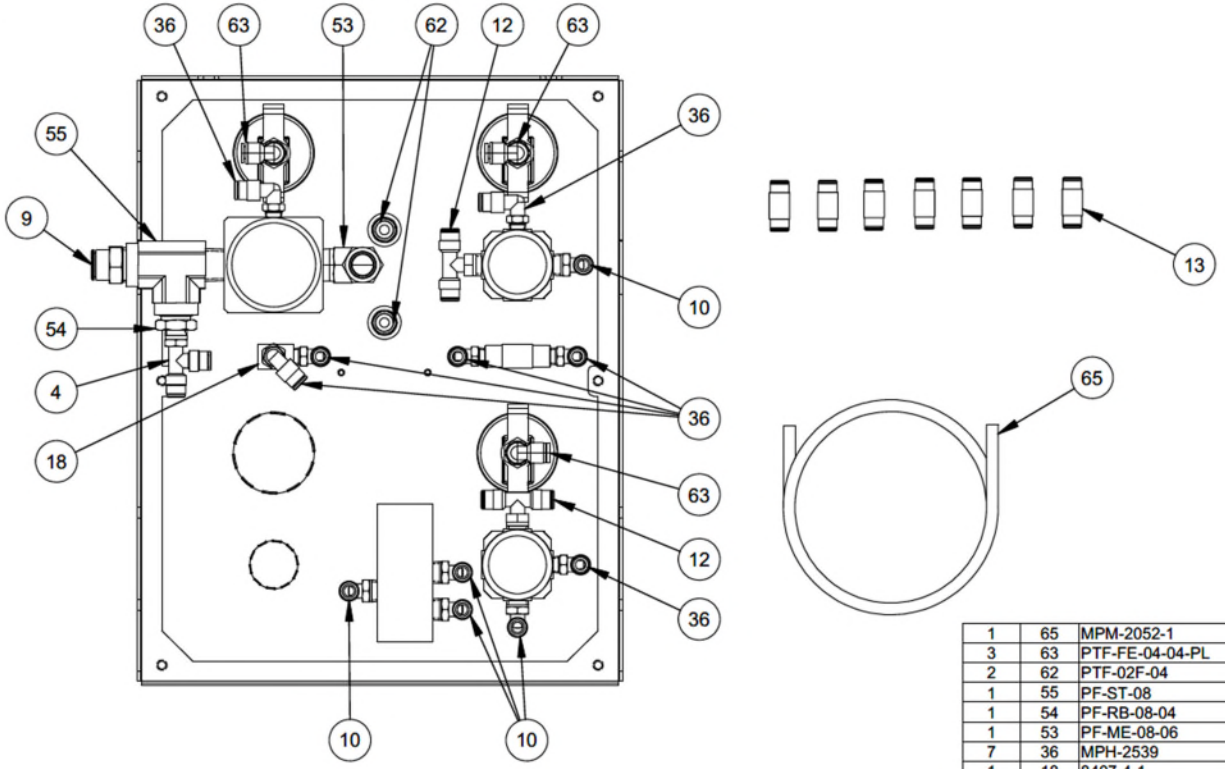

NOTES:

THREAD TAPE ALL NPT PER STANDARD

QTY	ITEM	PART NUMBER	DESCRIPTION
1	65	MPM-2052-1	TUBING
3	63	PTF-FE-04-04-PL	.250 FNPT TO .250 TUBE
2	62	PTF-02F-04	FEMALE CONNECTOR
1	55	PF-ST-08	STREET TEE
1	54	PF-RB-08-04	REDUCER BUSHING
1	53	PF-ME-08-06	MALE ELBOW
7	36	MPH-2539	MALE ELBOW
1	18	8407-4-1	3-WAY VALVE
7	13	07246	UNION-POLY
2	12	07238	BRANCH TEE
5	10	07233	MALE POLY ELBOW
1	9	06556	MALE CONNECTOR
1	4	06963	MALE RUN TEE SWIVEL

Parts List

MVP
MAGNUM VENUS PRODUCTS

CORPORATE HEADQUARTERS TECHNOLOGY CENTER
10535 Hardin Valley Road
Knoxville, TN 37932
865.686.5670

1862 Ives Avenue
Kent, WA 98032
253.854.2660

CONFIDENTIAL
This document contains proprietary information that is the sole property of MVP. Distribution, reproduction, disclosure or use by others, in part or in whole, is not permitted without prior written permission of MVP and all rights herein reserved.

TOLERANCES
UNLESS OTHERWISE SPECIFIED
ALL DIMENSIONS ARE IN INCHES

DECIMALS
.XX ± .010
.XXX ± .003
TIR ± .005

125

FRACTIONS
X/Y ± 1/32"
ANGULAR
XX° ± 1/2°

DO NOT SCALE DRAWING
ALL DIMENSIONS APPLY AFTER FINISH
BREAK SHARP EDGES .005 MAX RADII
.005 X 45° MAX CHAMFER

NEXT	FINAL	NEXT ASSY	FINAL ASSY

QTY PER ASSY | WHERE USED

SPECIFICATION: ASSEMBLY

DESIGNED	DRAWN	DATE
BSTAPLETON	BSTAPLETON	12/2/2016

DESCRIPTION: SINGLE RAM CONTROL PANEL, ADD ON UNIT

PROJECT

DWG NO: PCN-RAM-2

SHEET: 4 OF 6

REV: A

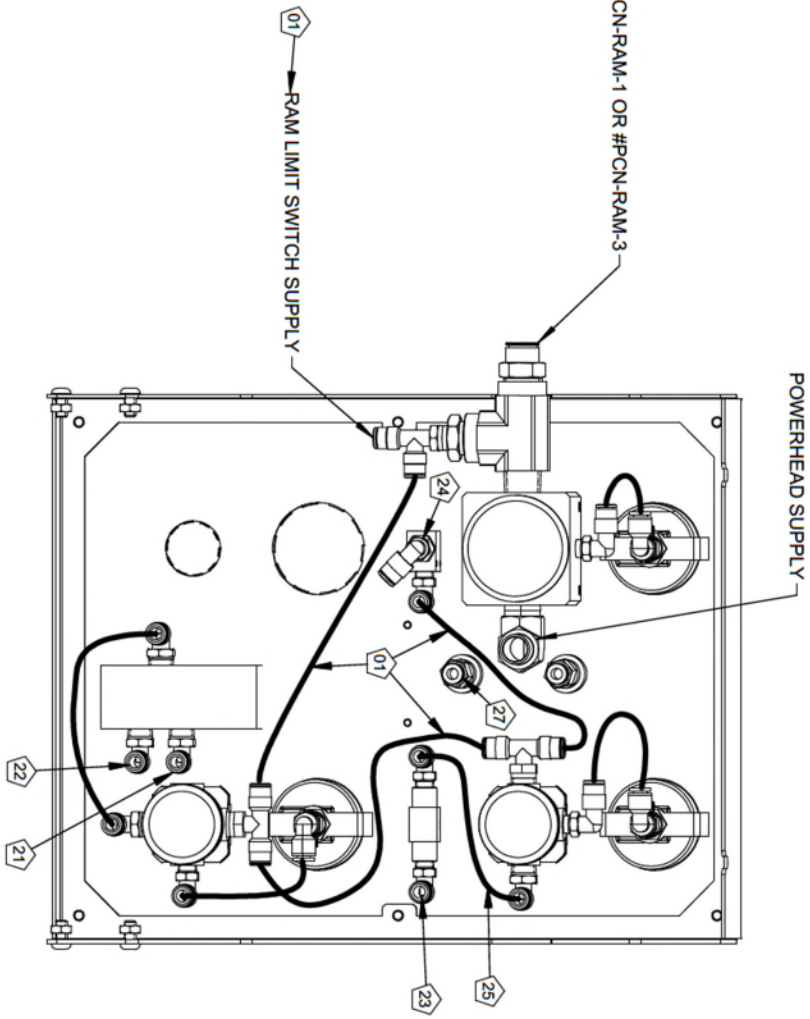

NOTES:
1. ALL NUMBERS AND SYMBOLS CORRESPOND WITH PNEUMATIC SCHEMATIC #PCN-RAM-2.
2. ATTACH 18" LONG OUTLET LINES TO REMAINING OPEN 1/4" POLYLINE CONNECTORS AND PORTS (TUBE #PUT-04-TB-1)
3. ADD UNION #07246 TO END OF 18" LONG OUTLET LINES.

MVP
MAGNUM VENUS PRODUCTS

CORPORATE HEADQUARTERS TECHNOLOGY CENTER
10325 Hardin Valley Road
Knoxville, TN 37932
865.686.5670

19804 Northeast 66th Ave
Ridgefield, WA 98642
253.854.2660

CONFIDENTIAL

This document contains proprietary information that is the sole property of MVP. Distribution, reproduction, disclosure or use by others, in part or in whole, is not permitted without prior written permission of MVP and all rights herein reserved.

TOLERANCES
UNLESS OTHERWISE SPECIFIED
ALL DIMENSIONS ARE IN INCHES

DECIMALS
.XX ± .010
.XXX ± .003
TIR ± .005

125√

FRACTIONS
X/Y ± 1/32"
ANGULAR
XX° ± 1/2°

"DO NOT SCALE DRAWING"
ALL DIMENSIONS APPLY AFTER FINISH
BREAK SHARP EDGES .005 MAX RADI.
.005 X 45° MAX CHAMFER

NEXT FINAL	NEXT ASSY	FINAL ASSY

QTY PER ASSY	WHERE USED

SPECIFICATION
ASSEMBLY

DESIGNED	DRAWN	DATE
BSTAPLETON	BSTAPLETON	12/2/2016

DESCRIPTION
SINGLE RAM CONTROL PANEL, ADD ON UNIT

PROJECT

DWG NO
PCN-RAM-2

SHEET
5 OF 6

REV
A

01	01	01	01	01	01	01	01	01
02	02	02	02	02	02	02	02	02
03	03	03	03	03	03	03	03	03
04	04	04	04	04	04	04	04	04
05	05	05	05	05	05	05	05	05
06	06	06	06	06	06	06	06	06
07	07	07	07	07	07	07	07	07
08	08	08	08	08	08	08	08	08
09	09	09	09	09	09	09	09	09
10	10	10	10	10	10	10	10	10
11	11	11	11	11	11	11	11	11
12	12	12	12	12	12	12	12	12
13	13	13	13	13	13	13	13	13

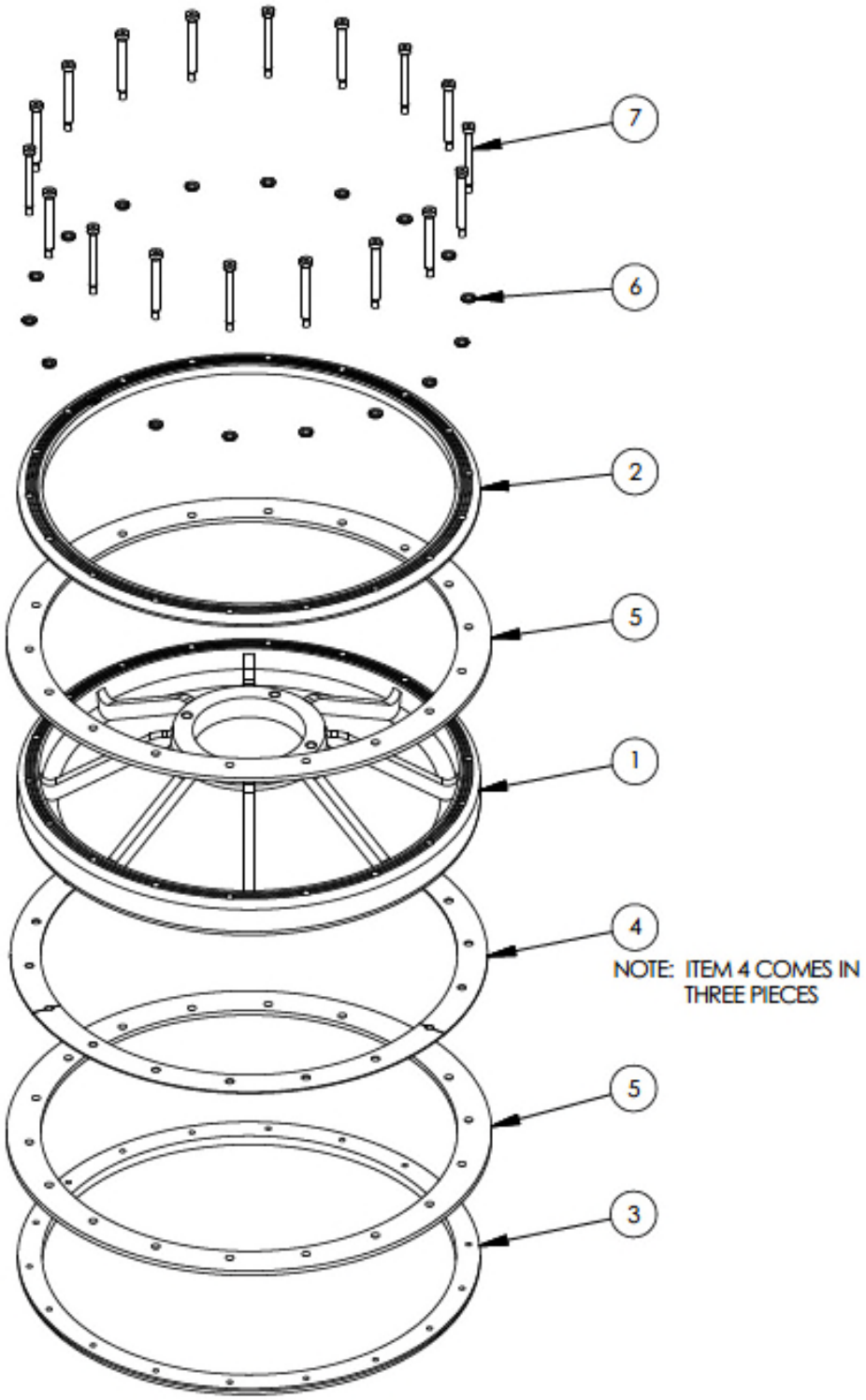

MAGNUM VENUS PRODUCTS

ADHESIVE PISTON ASSEMBLY	APD-1500-A

REV: SHEET 1 / 2 7/11/2017

Parts List			
ITEM	PART NUMBER	QTY	DESCRIPTION
1	60519-11	1	BARREL PISTON
2	60519-13	1	TOP RING
3	60519-5	1	BOTTOM RING
4	60510-1	1	BACKUP RING
5	60520-1	2	BARREL SEAL
6	60521-1	18	SPACER
7	F-SB-06-48-SS	18	SHOULDER BOLT

MAGNUM VENUS PRODUCTS

ADHESIVE PISTON ASSEMBLY	APD-1500-A

REV: SHEET 2 / 2 7/11/2017

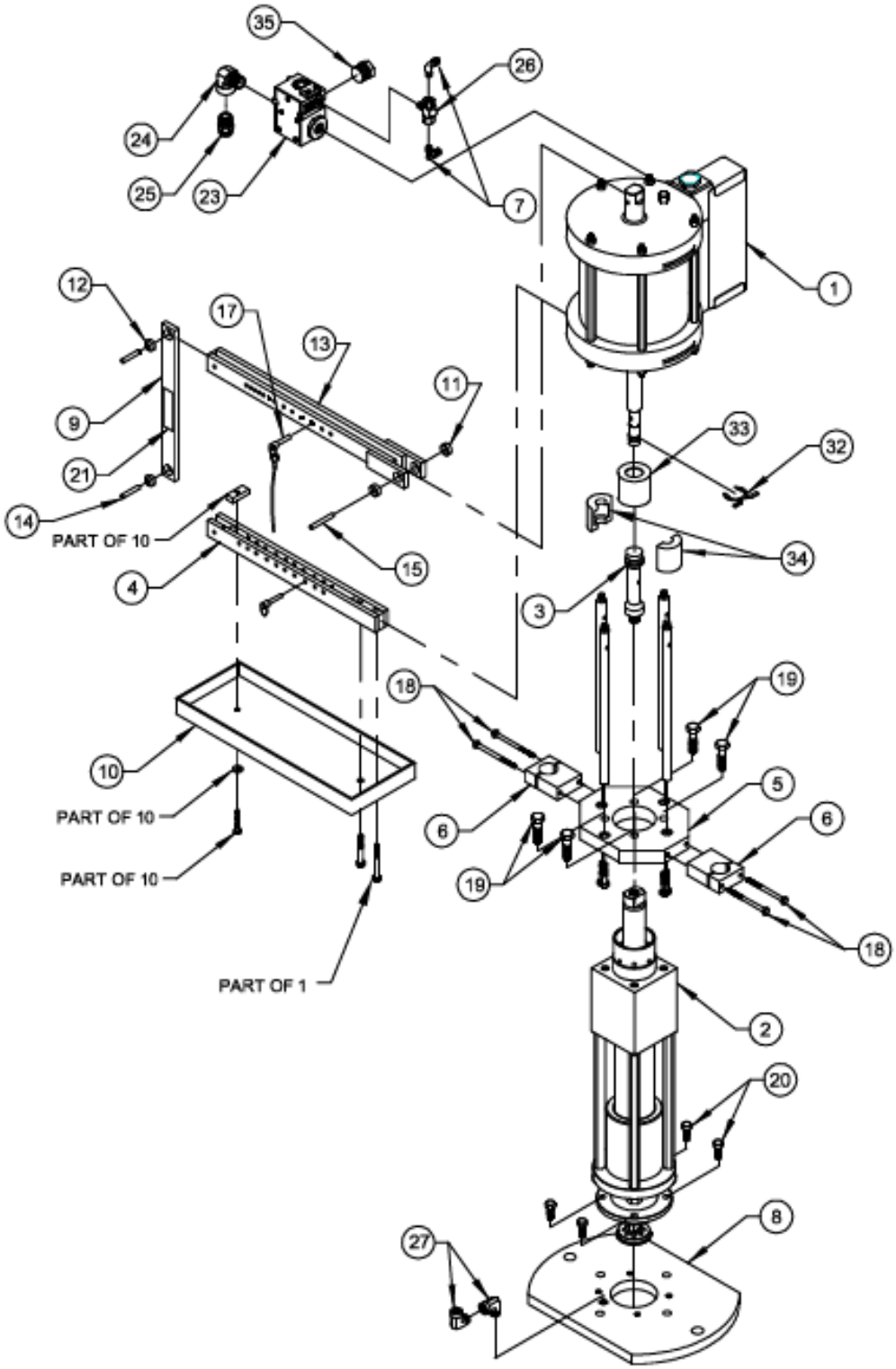

MAGNUM VENUS PLASTECH

COMPLETE SS PUMP ASSY W / AIR MOTOR	CCP-29100-SS

REV. A = ADDED ITEMS 32, 33, & 34 07/25/07 JEM
REV. B = ITEM 19 WAS 02705-14 11/28/07 JEM
REV. C = ADDED ITEM 35 03/18/08 BT2
REV. D = ITEM 1 WAS VPH-7000-P, ITEM 3 WAS VLS-4613, MADE ITEM 10 AN ASSEMBLY, UPDATED ALPHA NUMERIC 03/24/09 BT2

MVP
MAGNUM VENUS PRODUCTS

COMPLETE SS PUMP ASSY W / AIR MOTOR CCP-29100-SS

PARTS LIST

ITEM	PART NO.	QTY	DESCRIPTION
1	VPH-7000-P-HD	1	7" POWER HEAD ASSY
2	CCPLS-1000-SS	1	PUMP FLUID SECTION
3	VLS-4613-HD	1	PISTON ROD ADAPTER
4	CCP-1006	1	LOWER SLAVE ARM
5	CCP-1008	1	PUMP MOUNT PLATE
6	CCP-1007	2	SUPPORT BRACKET
7	MPH-2534	2	POLY FITTING ELBOW
8	CCP-1009	1	SUPPORT PLATE
9	CCP-1005	1	CONNECTING BAR
10	CCP-1003-01	1	TRIP TRAY ASSY
11	03502-1	2	BUSHING
12	03501-1	2	BUSHING
13	86480-1	1	UPPER SLAVE ARM
14	F-RP-04-20	2	ROLL PIN
15	F-RP-04-32	1	ROLL PIN
17	52106-3	1	CABLE ASSY
18	F-HB-04C-56	4	HEX BOLT
19	F-HB-08C-28-GR5	4	HEX BOLT
20	F-HB-06C-16	4	HEX BOLT
21	95033-EN	1	CAUTION LABEL (NOT SHOWN)
23	8407-1-1	1	AIR VALVE
24	PF-SE-08	1	STREET ELBOW
25	PF-HN-08-08S	1	FITTING
26	8407-3-1	1	SHUTTLE VALVE
27	PF-SE-04	2	ELBOW FITTING
32	PAT-PA-9112	1	SLEEVE CLIP
33	PAT-PA-9110	1	SHELL RETAINER
34	VPH-10009	2	HALF SHELL
35	PF-HP-12	1	HEX PLUG

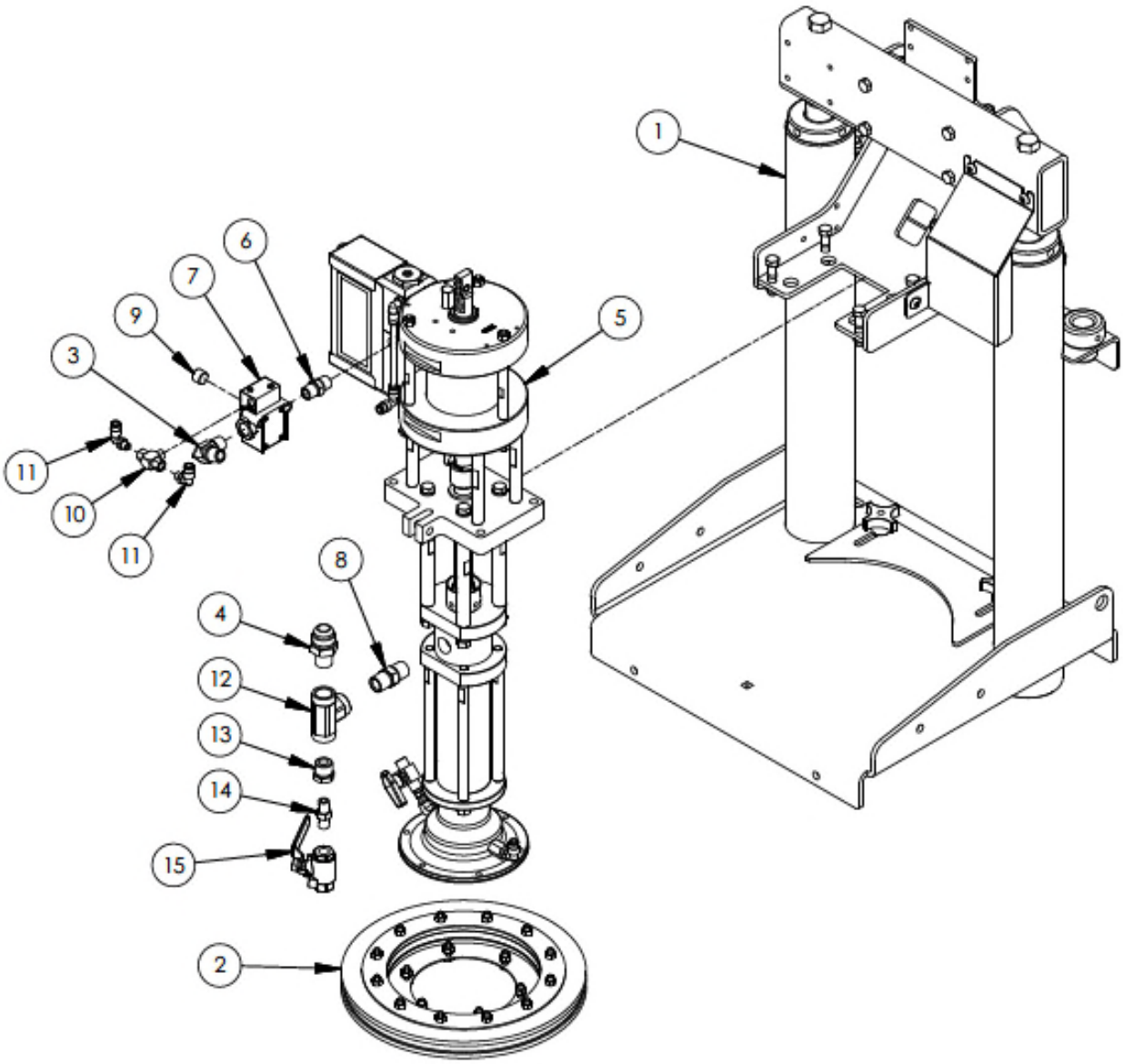

MAGNUM VENUS PRODUCTS

5 GALLON RAM - PANEL CONTROLLED	PAT-CCP-TRAN-PCN

REV: D 11/03/2017 SHEET 1 / 2 1/4/2017

Parts List			
ITEM	PART NUMBER	QTY	DESCRIPTION
1	PAT-RA-5000-2	1	5 GALLON RAM FRAME ASSEMBLY
2	PAT-RA-5021-EPDM	1	FOLLOWER PLATE ASSEMBLY
3	PF-ME-06	1	MALE ELBOW
4	PF-HN-08-12J-SS	1	HOSE ADAPTER
5	PAT-CCP-PA-1300-SS	1	PUMP ASSEMBLY
6	PF-HN-06	1	HEX NIPPLE
7	PV-101	1	PILOTED MAC VALVE 2-WAY
8	PF-HN-08-SS	1	HEX NIPPLE
9	PF-AP-06	1	ALLEN PLUG
10	8407-3-1	1	SHUTTLE VALVE
11	MPH-2539	2	MALE ELBOW
12	PF-FT-08-SS	1	FEMALE TEE
13	PF-RB-08-04-SS	1	REDUCER BUSHING
14	PF-HN-04-SS	1	HEX NIPPLE
15	CM-1005	1	SS BALL VALVE

MAGNUM VENUS PRODUCTS

5 GALLON RAM - PANEL CONTROLLED	PAT-CCP-TRAN-PCN

REV: D 11/03/2017 SHEET 2 / 2 1/4/2017

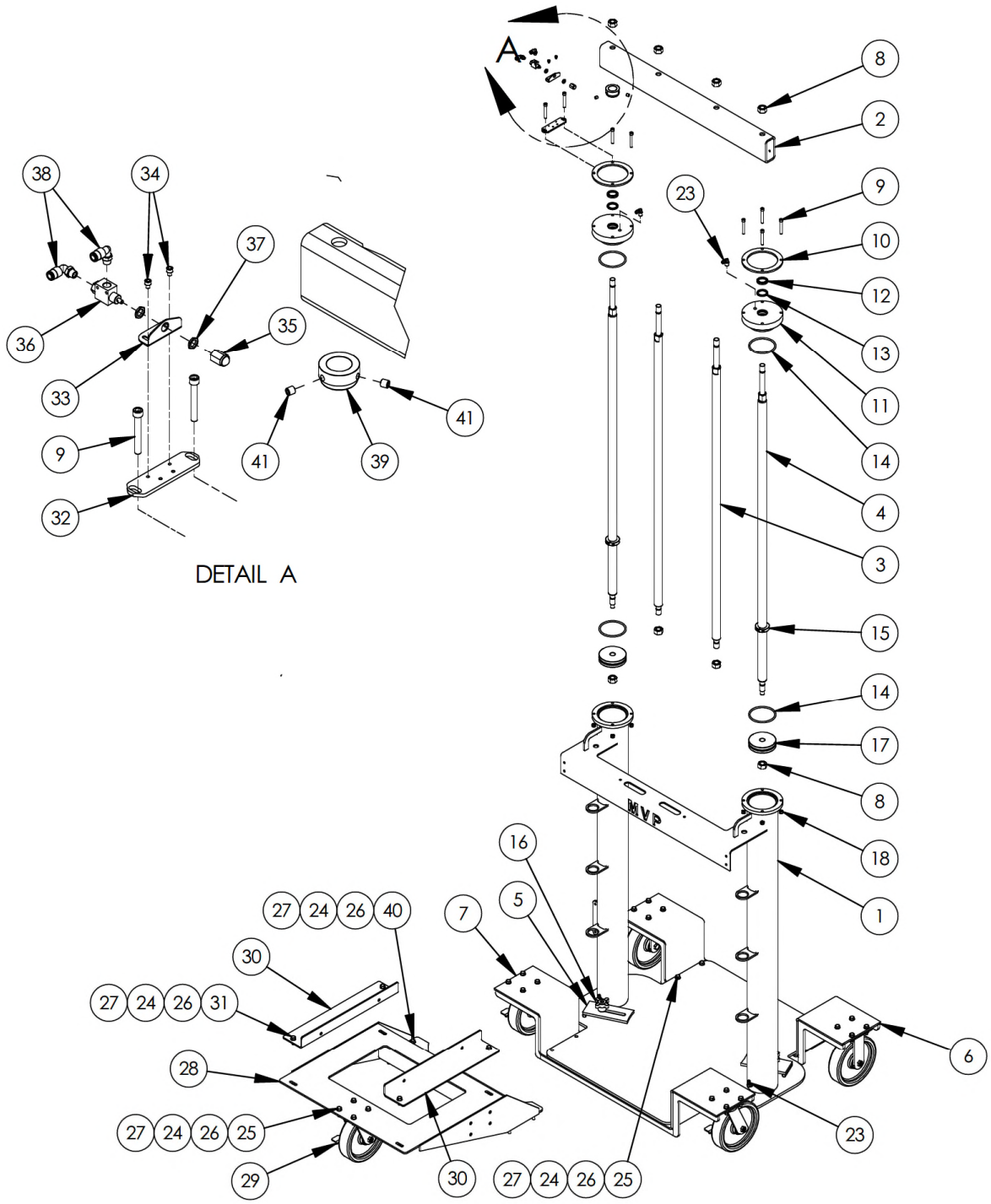

MAGNUM VENUS PRODUCTS

BASIC RAM FRAME ASSEMBLY	APD-2000-BASE

REV: B 06/27/2019 SHEET 1 / 2 12/8/2016

Parts List			
ITEM	PART NUMBER	QTY	DESCRIPTION
1	APD-1001	1	WELDMENT - MAIN FRAME
2	APD-1002	1	SUPPORT BAR
3	APD-1003	2	SUPPORT ROD
4	APD-1004	2	CYLIDER ROD
5	APD-1005	2	DRUM CLAMP WELDMENT
6	APD-1008-01F	1	FIXED WHEEL ASSEMBLY
7	APD-1008-01S	1	SWIVEL WHEEL ASSEMBLY
8	7201-1-12	8	HEX NUT
9	02668-18	8	HEX SOCKET CAP SCREW
10	60514-1	2	SUPPORT RING
11	60515-3	2	CYLINDER CAP
12	02007	2	ROD WIPER
13	02005	2	SEAL - PUTTY AIR LIFT
14	O-B-342	4	O-RING
15	06271	2	COLLAR CLAMP
16	06270	2	BARREL HOLD DOWN KNOB
17	60517-1	2	PISTON - LIFT CYLINDER
18	F-LN-05C	8	LOCK NUT
23	7701-6-2	4	POLY ELBOW FITTING
24	F-SW-06	16	LOCK WASHER
25	F-HB-06C-20	8	HEX BOLT
26	F-FW-06	16	FLAT WASHER
27	F-HN-06C	16	HEX NUT
28	APD-1023	1	PUMP SUPPORT FRAME
29	VDC-1006-APD	1	SWIVEL CASTER
30	PAT-BRKT-CCP-1	2	PUMP MOUNT BRACKET
31	F-HB-06C-16	4	HEX BOLT
32	APD-1009	1	MOUNT BRACKET - RAM LIMIT VALVE
33	APD-1020	1	SWITCH BRACKET
34	F-CS-1024-04	2	CAP SCREW
35	09343	1	BALL CAM ACTUATOR
36	09321	1	3-WAY VALVE, NORMALLY OPEN
37	MPM-2587	2	SPACER NUT
38	MPH-2539	2	MALE ELBOW
39	APD-1021	1	SWITCH ACTIVATOR
40	F-HB-06C-24	4	HEX BOLT
41	F-SS-06C-06-SS	2	SS SET SCREW

MAGNUM VENUS PRODUCTS

BASIC RAM FRAME ASSEMBLY	APD-2000-BASE

REV: B 06/27/2019 SHEET 2 / 2 12/8/2016

MVP MAGNUM VENUS PRODUCTS

CORPORATE HEADQUARTERS
2030 Falling Waters Rd, Suite 350, Knoxville, TN 37922 · USA · Tel: (865) 686-5670

DISTRIBUTION AND PURCHASING
642 Barbrow Ln, Knoxville, TN 37932 · USA · Tel: (865) 684-4416

TECHNOLOGY CENTER AND MANUFACTURING
1862 Ives Ave, Kent, WA 98032 · USA · Tel (253) 854-2660 · Fax (253) 854-1666

E-mail: info@mvpind.com

For a list of international distributors, visit our website at :
www.mvpind.com/mvp-international